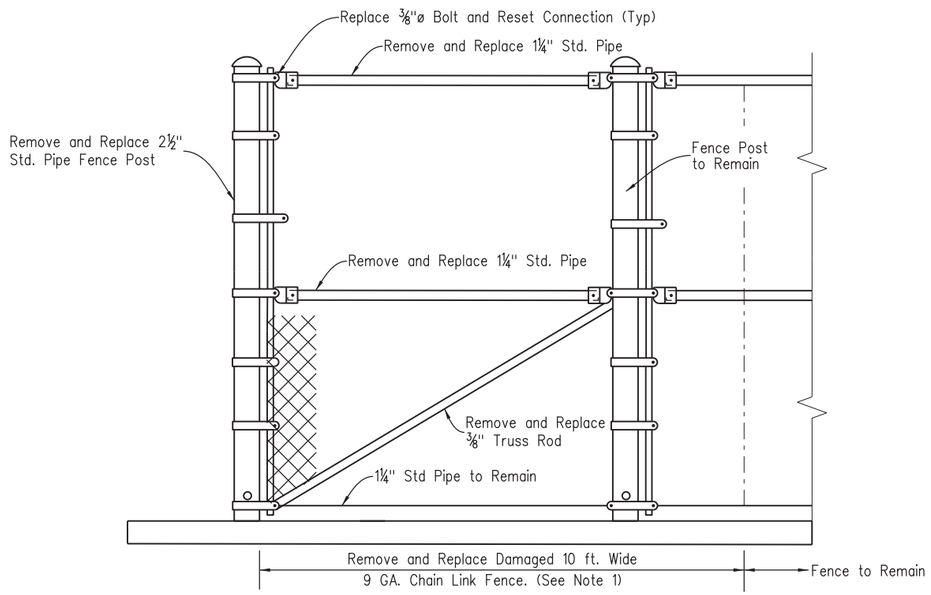

ELEVATION

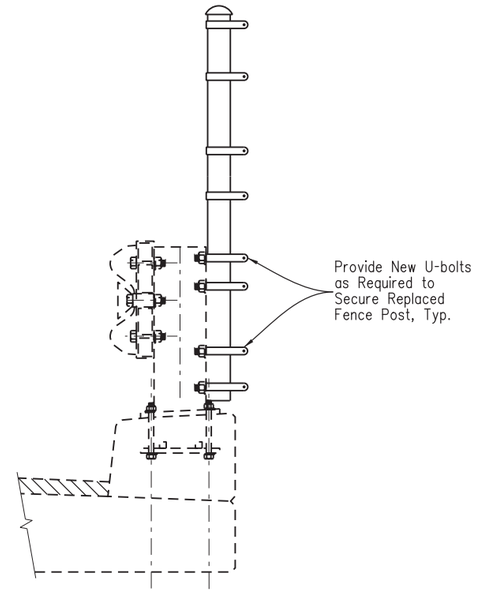

TYPICAL SECTION

CHAIN LINK FENCE REPAIR

NOTES

1. Cut damaged chain link fence and replace with a section 2'-0" more in length. Secure fence with with 9 ga. steel galv wire ties at 12" to all pipes and existing fence.
2. Temporarily remove post. Perform Class 2 concrete removal leaving the reinforcement intact. Clean the exposed concrete surface and reinforcement and prime with epoxy. Splice new, #4 epoxy bars into rail curb. Patch the curb with Concrete Class D (Bridge) (Special). Reset the post and replace ⅝"ø bolts (A307), hex nuts and lock washers.

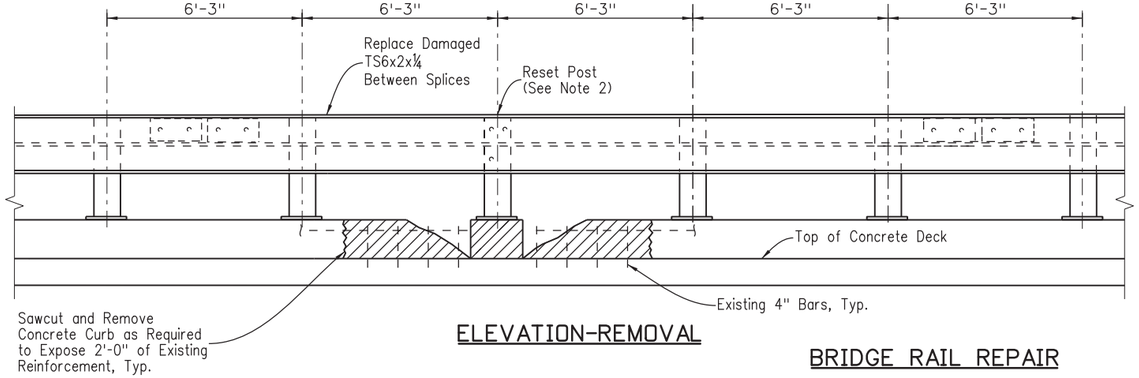

ELEVATION-REMOVAL

BRIDGE RAIL REPAIR

NOTE

HMA not shown for clarity.

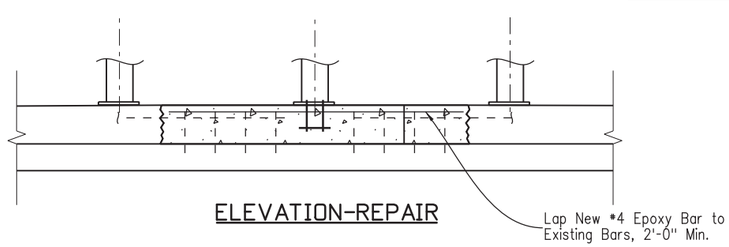

ELEVATION-REPAIR

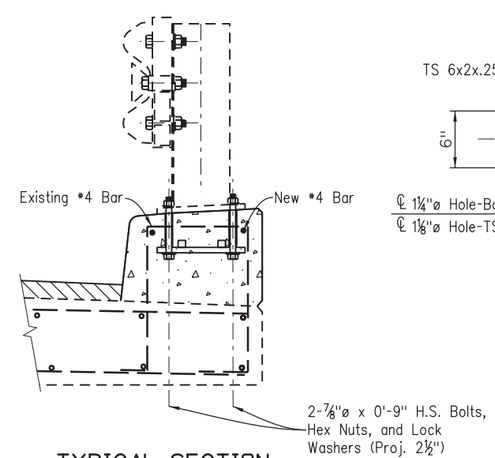

TYPICAL SECTION AT REPAIRED POST

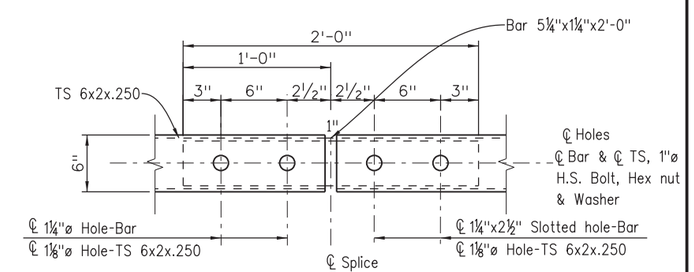

TUBE SPLICE DETAIL

Design				Detail				Quantities			
	INITIAL	DATE		INITIAL	DATE		INITIAL	DATE		INITIAL	DATE
Designed By	NS	11/16	Detailed By	RW	11/16	Quantities By	NS	11/16			
Checked By	GM	11/16	Checked By	GMM	11/16	Checked By	GMM	11/16			

busanskyl 1:37:42 PM pw:\\617479-PWINT.aecomonline.local:AECOM_DS01_NA\Documents\60505397-US50 Royal Gorge West_SH9 Jct North\900 Work\910 CAD\02 SHEETS\04_Structural\US50_SH9-S-B08_K-15-W_RAIL & FENCE REP.dgn

Print Date: 1/25/2017
File Name: US50_SH9-S-B08_K-15-W_RAIL & FENCE REP.dgn
Horiz. Scale: N/A Vert. Scale: N/A

TRANSPORTATION
AECOM Technical Services, Inc.
2315 Briargate Parkway, Suite 150 Colorado Springs, CO 80920
T 719.531.0001
AECOM
www.aecom.com

Sheet Revisions		
Date:	Comments	Init.

Colorado Department of Transportation
CDOT
1480 Quail Lake, Suite A
Colorado Springs, CO 80906
Phone: 719-634-2323 FAX: 719-227-3298
Region 2
DW

As Constructed
No Revisions:
Revised:
Void:

RAIL AND FENCE REPAIR DETAILS
STR NO. K-15-W

Designer: M. SUELAU
Detailer: L. BUSANSKY
Subset: Bridge
Structure Numbers: K-15-W
Subset Sheets: B8 of B15

Project No./Code
STA 0503-089
21255
Sheet Number 111