UPLANDS TOWNHOMES

DEVELOPED BY THE HOUSING AUTHORITY OF PUEBLO

PROJECT No.: I.F.B 17-524-RAD

ACERO AVE. and SPRAGUE AVE., PUEBLO, COLORADO 81004

BLDG. E CODE STUDY SUMMARY

APPLICABLE CODES:	2015 INTERNATIONAL BUILDING CODE UNIFORM FEDERAL ACCESSIBILITY STANDARDS
PROJECT DESCRIPTION:	NEW CONSTRUCTION - APARTMENT BUILDING
OCCUPANCY CLASSIFICATION: 2015 IBC CHAPTER 3	R-2: RESIDENTIAL, APARTMENT HOMES
TYPE of CONSTRUCTION: 2015 IBC TABLE 601	TYPE V-B with a MIN. FIRE-SEPARATION DISTANCE of 10'-0"
FIRE RESISTANCE RATING REQs. for BLDG. ELEMENTS 2015 IBC TABLE 601	PRIMARY STRUCTURAL FRAME: 0 BEARING WALLS EXTERIOR: 0 BEARING WALLS INTERIOR: 0 NONBEARING EXTERIOR WALLS: 0 INTERIOR NONBEARING WALLS: 0 FLOOR CONSTRUCTION: 0 ROOF CONSTRUCTION: 0
TABULAR ALLOWABLE AREA per FLOOR: 2015 IBC TABLE 506.2	R-2 S13R: At 7000 (SQ.FT.) — R-2 ACTUAL AREA: 2535 SQ. FT. MAX (1st FL.)
TABULAR ALLOWABLE HEIGHT and STORIES: 2015 IBC TABLE 504.3 and 504.4	R-2, S13R: 60 FEET, 3 STORY — R-2 ACTUAL HEIGHT: 2 STORY, 26 FEET
FLOOR AREA, GROSS: 2015 IBC SECTION 202 - DEFINITIONS	FIRST FLOOR: 2535 SQ. FT. SECOND FLOOR: 1038 SQ. FT.
OCCUPANT LOAD: OCCUPANCY:	2015 IBC TABLE 1004.1.2

FUNCTION of SPACE	S.F.	LOAD FACTOR(per occ.)	GROSS/ NET	OCC. LOAD	NOTES:
STORAGE - 1st FL.	80 SQ. FT.	300 SQ. FT.	GROSS	.27	ACCESSORY.EA AREA LESS than 100 SF
RESIDENTIAL - 1st FL.	2535 SQ. FT.	200 SQ. FT.	GROSS	12.68	
RESIDENTIAL - 2nd FL.	1038 SQ. FT.	200 SQ. FT.	GROSS	5.19	
			TOTAL	18.14	ROUNDED: 19

OCCUPANCY SEPARATION: 2015 IBC SECTION 420	WALLS SEPARATING DWELLING UNITS from EACH OTHER and WALLS SEPARATING DWELLING UNITS from OTHER OCCUPANCIES SHALL be FIRE PARTITIONS.
INCIDENTAL USES SEPARATION: 2015 IBC SECTION 509, TABLE 509	N/A
CORRIDORS: 2015 IBC SECTION 1020	N/A
NUMBER OF EXITS: 2015 IBC TABLE 1006.3.1	2- EXITS REQUIRE
TRAVEL DISTANCE: 2015 IBC TABLE 1017.2	R-2 with SPRINKLER SYSTEM: 250 FEET. ACTUAL MAX. TRAVEL DISTANCE: 56 FEET.
AUTOMATIC SPRINKLER SYSTEM: 2015 IBC SECTION 420.5	REQUIRED - GROUP R OCCUPANCIES SHALL be EQUIPPED throughout with an AUTOMATIC SPRINKLER SYSTEM IN ACCORDANCE with NFPA 13R.
FIRE ALARM SYSTEM: 2015 IBC SECTION 907	R-2, 2 STORY with 4 DWELLING UNITS: NOT REQUIRED
ACCESSIBILITY: 2015 IBC SECTION 1107.6.2 UFAS SECTION 4.34	R-2, PER IBC: TYPE A UNITS: 2% of TOTAL UNITS on SITE REQUIRED to be TYPE A ACCESSIBLE. GROUND FLOOR of ALL OTHER UNITS REQUIRED to be TYPE B ACCESSIBLE. PER UFAS: 5% of TOTAL UNITS on SITE REQUIRED to be ACCESSIBLE (SIT. to TYPE A as in IBC) TOTAL UNITS on SITE: 72 TOTAL TYPE A ACCESSIBLE UNITS on SITE: 6 UNITS (SHOWN in BLDGS. F & G) 1st FLOOR of ALL UNITS are TYPE B ACCESSIBLE
PLUMBING FIXTURES:	2015 IBC TABLE 2902.1 and 2015 IPC TABLE 403.1 and SECT. 419.2

PLUMBING FIXTURES per OCCUPANCY TYPE

OCCUPANCY TYPE: R-2 RESIDENTIAL	REQUIRED		PROVIDED
		# of FIXTURES REQ.	# of FIXTURES PROVIDED
W.C.s/URINALS	1 per DWELLING UNIT	4	8
LAVATORIES	1 per DWELLING UNIT	4	8
BATHTUBS/SHOWERS	1 per DWELLING UNIT	4	4
OTHER FIXTURES	1 KIT. SINK per DWELLING UNIT. 1 CLOTHES WASHER CONNECTION per 20 UNITS	4 KIT. SINK 1 CLOTHES WASHER CONNECTION	4 KIT. SINKS 4 CLOTHES WASHER CONNECTIONS

CODE STUDY LEGEND

1-HR RATED FIRE PARTITION - SEPARATION

BUILDING EXIT

EGRESS/ESCAPE WINDOW

GENERAL NOTES

1. THIS PROJECT SHALL MEET the 2015 ENTERPRISE GREEN COMMUNITIES CRITERIA
2. COORDINATE ALL WORK with ALL DISCIPLINES INCLUDING, but NOT LIMITED to STRUCTURAL, MECHANICAL, ELECTRICAL, PLUMBING, and CIVIL.
3. PROVIDE and INSTALL 2X6 WD. BLOCKING BETWEEN STUDS and BEHIND GYP. BD. as REQUIRED for ALL WALL MOUNTED DOOR HDWR, CLOSET SHELVES, TOILET ACCESSORIES, GRAB BARS, VANITY COUNTERTOPS, WALL and BASE CABINETS, and TELE/DATA BOARD.
4. PROVIDE 3/4" RADIUS BULLNOSE CORNER BEAD at ALL EXPOSED GYP. BD. OUTSIDE WALL CORNERS on INTERIOR of BUILDING.
5. BUILDINGS SHALL BE PROVIDED with AUTOMATIC FIRE SUPPRESSION SPRINKLER SYSTEM in ACCORDANCE with NFPA 13R
6. EACH UNIT SHALL HAVE a FIRE EXTINGUISHER INSTALLED on the FIRST FLOOR. EACH STORAGE ROOM and WATER ENTRY ROOM SHALL HAVE a FIRE EXTINGUISHER INSTALLED in the ROOM.
7. NORTH ARROW NOT SHOWN on FLOOR PLANS.
8. THE PORCH ELEVATIONS of ALL BUILDINGS SHALL BE ORIENTED to FACE the STREET.

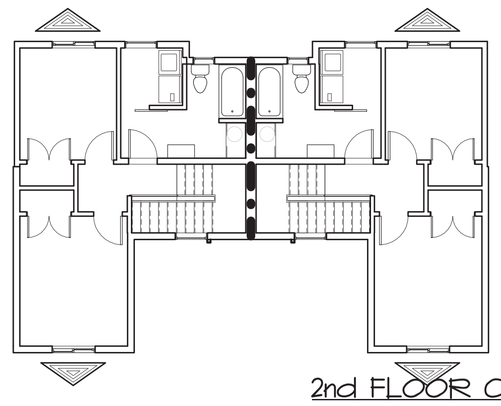

2 2nd FLOOR CODE STUDY - BLDG. E
SC: 1/8" = 1'-0" RE: A2.1A

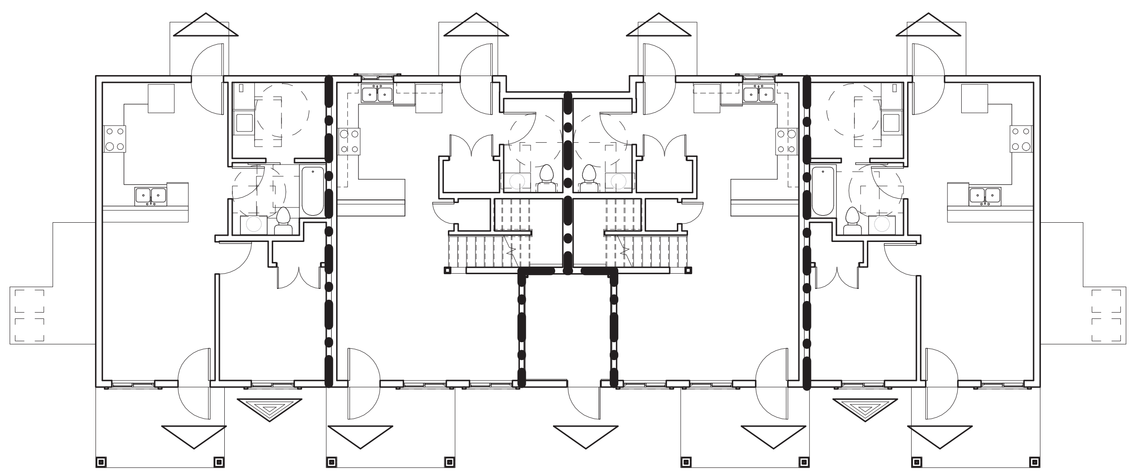

1 1st FLOOR CODE STUDY - BLDG. E
SC: 1/8" = 1'-0" RE: A2.1A

BUILDING E SHEET INDEX

G1.0E	BUILDING E COVER, CODE STUDY, INDEX
A1.1E	BUILDING E FLOOR PLANS
A1.2E	BUILDING E REFLECTED CEILING AND ROOF PLANS
A2.1E	BUILDING E ELEVATIONS
A3.1E	BUILDING E BUILDING SECTIONS, STAIR WALL INT. ELEVATION, and RADON VENT DETAIL
A3.2E	BUILDING E WALL SECTIONS
A4.1E	BUILDING E DOOR and WINDOW SCHEDULES, ELEVATAIONS and DETAILS
A5.1E	BUILDING E FINISH SCHEDULE and INTERIOR ELEVATIONS
S1E	FOUNDATION AND MAIN FLOOR FRAMING PLANS
S2E	UPPER LEVEL AND ROOF FRAMING PLANS
S3E	DETAILS AND GENERAL NOTES
M0.1E	DRAWING INDEX, GENERAL NOTES, LEGENDS AND SCHEDULES
M1.1E	FIRST AND SECOND FLOOR - BUILDING E - HVAC
P0.1E	DRAWING INDEX, GENERAL NOTES AND LEGENDS
P0.2E	SCHEDULES AND DIAGRAMS
P1.1E	CRAWL SPACE FLOOR - BUILDING E - PLUMBING
P1.2E	FIRST AND SECOND FLOOR PLANS - BUILDING E - PLUMBING
E1.0E	BLDG E - ELECTRICAL LEGENDS AND SERVICE DIAGRAMS
E1.1E	BLDG E - ELECTRICAL PLANS

PROJECT TEAM

OWNER:
THE HOUSING AUTHORITY OF PUEBLO
201 S. VICTORIA
PUEBLO, CO 81003
PH: 719-586-8976

ARCHITECT:
HGF ARCHITECTS, INC.
2602 N. ELIZABETH ST
PUEBLO, COLORADO 81003
PH: 719-543-7600
FX: 719-545-2910

ELECTRICAL ENGINEER:
KOHNERT ELECTRICAL ENGINEERS
911 S. 8TH. ST. SUITE 200
COLORADO SPRINGS, CO 80906
PH: 719-633-2637

MECHANICAL ENGINEER:
AE ASSOCIATES
308 FILLMORE, SUITE 200
COLORADO SPRINGS CO 80907
PH:719-262-9430

STRUCTURAL ENGINEER
VALENTINE ENGINEERING
415 N. GREENWOOD
PUEBLO, CO 81003
PH: 719-542-9230

CIVIL ENGINEER:
ALTITUDE LAND CONSULTANTS
201 E. LAS ANIMAS #113
COLORADO SPRINGS, CO 80903
PH: 719-231-3959

DRAWING LEGEND

D 11	DOOR TAG
W 14	WINDOW TAG
20C	WALL TYPE TAG
1	FLAG NOTE
Room name 101	ROOM NAME and NUMBER TAG
11	CEILING TYPE TAG
0'-00"	CEILING HEIGHT TAG

HGF ARCHITECTS

HOUSING AUTHORITY OF THE CITY OF PUEBLO

UPLANDS TOWNHOMES
DEVELOPED BY THE HOUSING AUTHORITY OF PUEBLO
PROJECT No.: I.F.B 17-524-RAD
ACERO AVE. and SPRAGUE AVE., PUEBLO, COLORADO 81004

DATE 03/29/2017
DRAWN JSB
CHECK RJH
REVISIONS:

SHEET G1.0E

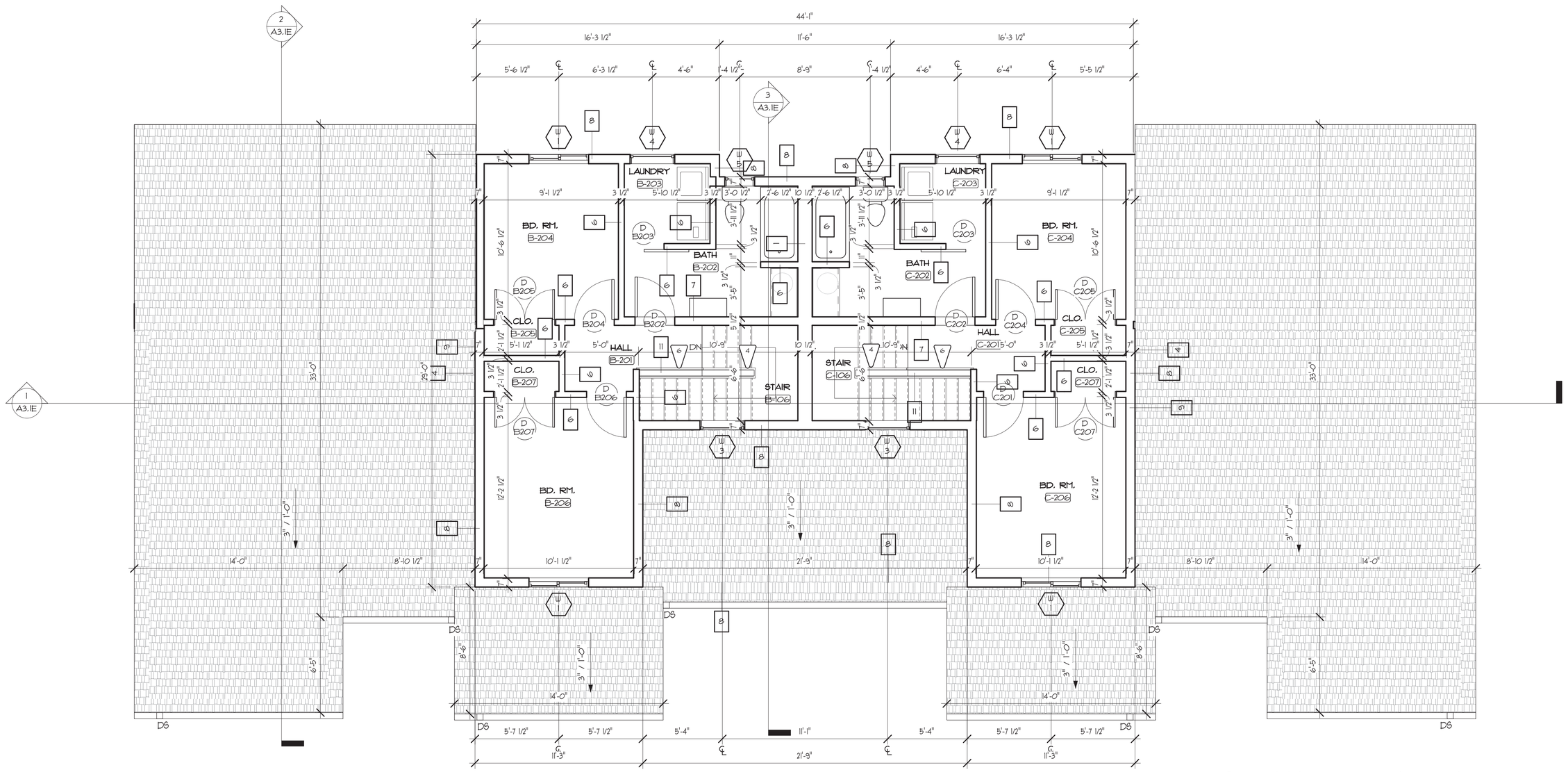

2 2nd FLOOR - BLDG. E

SC: 1/4" = 1'-0" RE: A2.1A

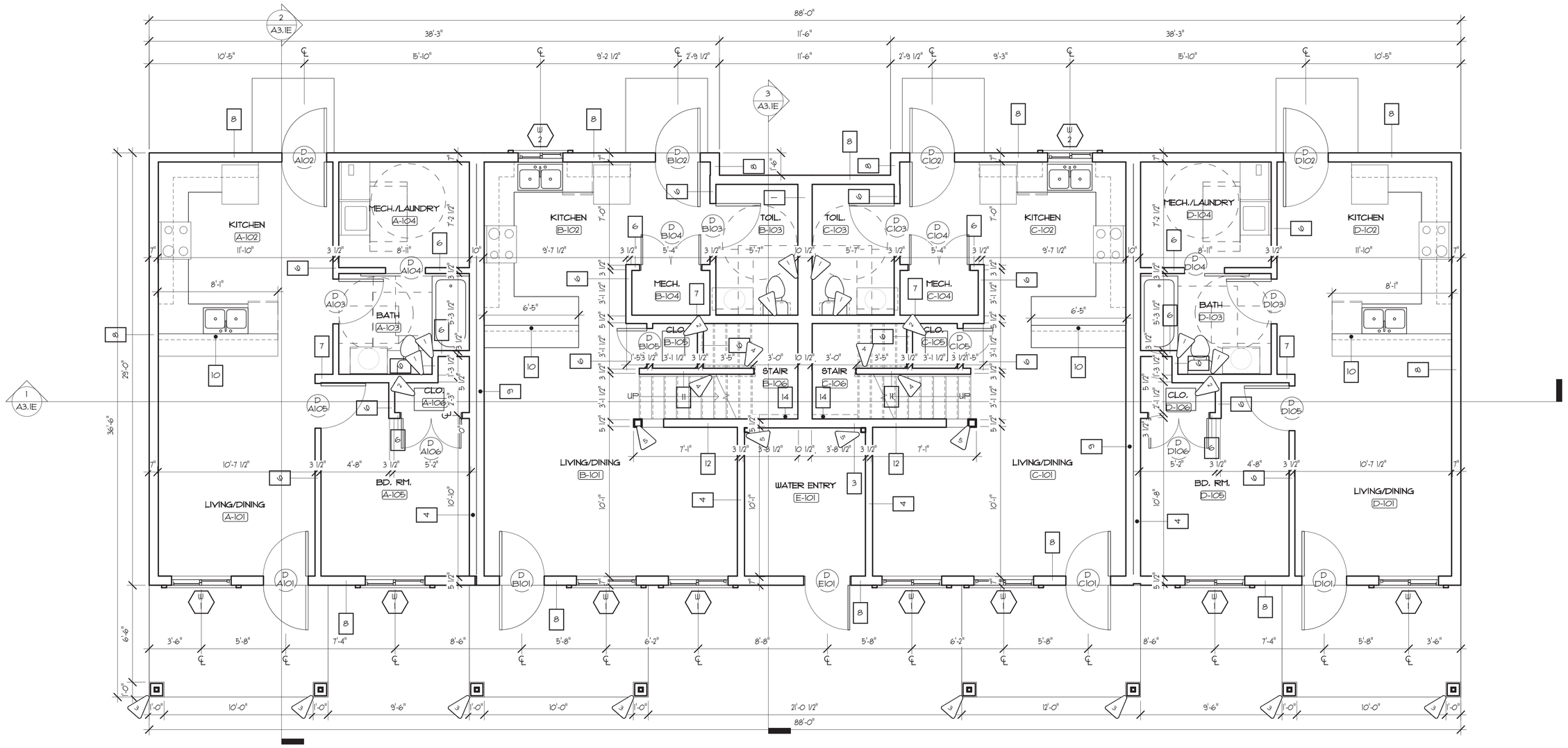

1 1st FLOOR - BLDG. E

SC: 1/4" = 1'-0" RE: A2.1A

ROOM FINISH KEY, RE: INT. ELEV.

WALL TYPES

TYPE MARK	DESCRIPTION	FIRE RATING	STC RATING
1	BEARING FIRE PARTITION SEPARATION WALL: (2) LAYERS 1" GYP. BD. FRAMED INSIDE of 2" MTL. C-RUNNERS with 3/4" AIR SPACE and 2x6 WD. FRMG. at 16" O.C. and 5/8" TYPE "X" GYP. BD. on BOTH SIDES. PROVIDE 3" MINERAL WOOL BATT. INSULATION in CAVITY of FRMG. PROVIDE AIR BARRIER/HOUSEWRAP between FRMG. and 5/8" TYPE "X" GYP. BD. on ONE SIDE ONLY. 2" MTL. C-RUNNER, GYP. BD. and 3/4" AIRSPACE CORE SHALL RUN from TOP of FOUNDATION to UNDERSIDE of ROOF SHEATHING ABOVE. RE: WALL SECTIONS UL DESIGN No. U336	N/A MIN 1-HR	54
2	FIRE PARTITION SEPARATION WALL: 2x4 WD. FRMG. at 16" O.C. with 5/8" TYPE "X" GYP. on ONE SIDE and 1/2" RESILIENT CHANNEL and 5/8" TYPE "X" GYP. BD. on OTHER SIDE of FRMG. RUN FULL HEIGHT to UNDERSIDE of FLOOR/ROOF SHEATHING. PROVIDE MIN. 3" THK. FIBERGLASS INSULATION in CAVITY FULL HEIGHT. UL DES. No. U311	1-HR	50
3	FIRE PARTITION SEPARATION WALL: 2x6 WD. FRMG. at 16" O.C. with 5/8" TYPE "X" GYP. on ONE SIDE and 1/2" RESILIENT CHANNEL and 5/8" TYPE "X" GYP. BD. on OTHER SIDE of FRMG. MIN. 3" THICK FIBERGLASS BATT IN CAVITY. RUN FULL HEIGHT to UNDERSIDE of FLOOR/ROOF SHEATHING or to EXTERIOR WALL ABOVE UL DES. No. U311.	1-HR	N/A
4	FIRE PARTITION SEPARATION WALL: 2x4 WD. STUDS at 24" O.C. with 1/2" SOUNDBOARD and 5/8" TYPE "X" GYP. BD. BOTH SIDES with FIBERGLASS BATT INSUL. WALL MUST RUN FULL HEIGHT to UNDERSIDE of FLOOR or ROOF SHEATHING ABOVE or UNTIL IT BECOMES an EXTERIOR WALL. UL DES. No. U387	N/A	50
5	FIRE PARTITION SEPARATION WALL: 2x6 WD. STUDS at 16" O.C. with 1/2" SOUNDBOARD and 5/8" TYPE "X" GYP. BD. BOTH SIDES with FIBERGLASS BATT INSUL. WALL MUST RUN FULL HEIGHT to FLOOR or ROOF SHEATHING ABOVE or UNTIL IT BECOMES an EXTERIOR WALL. UL DES. No. U387	N/A	N/A
6	2x4 WD. STUDS at 16" O.C. with 5/8" TYPE "X" GYP. BD. BOTH SIDES from TOP of FLOOR SHEATHING to UNDERSIDE of FLOOR/ROOF STRUCTURE ABOVE.	N/A	N/A
7	PLUMBING WALL: 2x6 WD. STUDS at 16" O.C. with 5/8" TYPE "X" GYP. BD. BOTH SIDES from TOP of FLOOR SHEATHING to UNDERSIDE of FLOOR/ROOF STRUCTURE ABOVE.	N/A	N/A
8	PORTLAND CEMENT STUCCO SYSTEM, RE: SPECIFICATIONS -OR- FIBER CEMENT LAP SIDING from FOUNDATION to UNDERSIDE of ROOF SOFFIT on FLUID APPLIED VAPOR/AIR BARRIER on 3/4" O.S.B. SHEATHING on 2x6 WD. FRMG at 16" O.C. FULL HEIGHT to ROOF STRUCTURE with 5/8" TYPE "X" GYP. BD. on INTERIOR. PROVIDE MIN. R-20 BATT. INSULATION in WALL CAVITIES FULL HGT. RE: ELEVATIONS	N/A	N/A
9	2x6 WD. STUDS at 16" O.C. with 5/8" TYPE "X" GYP. BD. BOTH SIDES	N/A	N/A
10	HALF WALL: 2x4 WD. STUDS at 16" O.C. with 5/8" TYPE "X" GYP. BD. BOTH SIDES. RUN to UNDERSIDE of COUNTERTOP ABOVE. RE: INTERIOR ELEVATIONS	1-HR	50
11	SLOPING STAIR WALL: 2x4 WD. STUDS at 16" O.C. with 5/8" TYPE "X" GYP. BD. BOTH SIDES with WOOD CAP. RE: RE: SLOPING STAIR WALL INTERIOR ELEVATIONS on SECTION/WALL SECTION SHEET for HEIGHT.	N/A	N/A
12	SLOPING STAIR WALL: 2x6 WD. STUDS at 16" O.C. with 5/8" TYPE "X" GYP. BD. BOTH SIDES with WOOD CAP. RE: SLOPING STAIR WALL INTERIOR ELEVATIONS on SECTION/WALL SECTION SHEET for HEIGHT.	N/A	N/A
13	SLOPING STAIR DOUBLE STUD WALL: TWO 2x4 WD. STUDS with 3"+/- AIR SPACE at 24" O.C. with 5/8" TYPE "X" GYP. BD. BOTH SIDES. RE: BUILDING SECTIONS for HEIGHT	N/A	
14	2x4 WD. STUDS at 24" O.C. from TOP of FLOOR SHEATHING to UNDERSIDE of STAIR STRUCTURE	N/A	

NOTES:

- ALL EXTERIOR DIMENSIONS on FLOOR PLANS are from OUTSIDE FACE of EXTERIOR WALL SHEATHING UNLESS OTHERWISE NOTED.
- ALL INTERIOR DIMENSIONS on FLOOR PLANS are to/from FACE of STUD UNLESS OTHERWISE NOTED.
- PROVIDE 5/8" TYPE "X" MOLD-MILDEW-MOISTURE RESISTANT GYP. BD. at ALL WET WALLS (ADJACENT to SINKS, TOILETS and WASHING MACHINES) in LIEU of 5/8" TYPE "X" GYP. BD.
- PROVIDE 5/8" CEMENT BD. BEHIND ALL SHOWER/TUB ENCLOSURES in LIEU of 5/8" TYPE "X" GYP BD.

NEW WORK FLAG NOTES

Flag Note Number	NOTE
1	PROVIDE BLOCKING for FUTURE INSTALLATION of GRAB BARS. RE: INTERIOR ELEVATIONS
2	CRAWL SPACE ACCESS DOOR with TAMPER PROOF SCREWS
3	BRICK VENEER/STUCO PORCH COLUMN WRAP: SUPER QUEEN SIZE BRICK VENEER from TOP. of FOUNDATION to 4'-0" A.F.F with BRICK SILL and PORTLAND CEMENT PLASTER-BASED (3) COAT STUCCO SYSTEM on MTL. DIAMOND LATH over (1) LAYER 15 lb. FELT on FLUID APPLIED VAPOR/AIR BARRIER on 3/4" OSB SHEATHING, 2x WD FRMG. from TOP of BRICK to UNDERSIDE of ROOF FRMG..
4	STAIR HANDRAIL at 36" ABOVE EDGE of STAIR NOSING. ONE SIDE OF STAIR ONLY
5	WRAP STRUCTURAL COLUMN with 5/8" TYPE "X" GYP. BD.
6	WD. GUARD RAIL
7	PRE-MANUF. METAL AWNING, RE: SPECIFICATIONS
GEN. NOTE:	PROVIDE and INSTALL WINDOW BLINDS at ALL WINDOWS

HIGIE ARCHITECTS

HOUSING AUTHORITY THE CITY OF PUEBLO

UPLANDS TOWNHOMES
DEVELOPED BY THE HOUSING AUTHORITY OF PUEBLO

PROJECT No.: I.F.B 17-5241-RAD

ACERO AVE. and SPRAGUE AVE., PUEBLO, COLORADO 81004

DATE 03/29/2017

DRAWN JSB

CHECK RJH

REVISIONS:

SHEET A1.1E

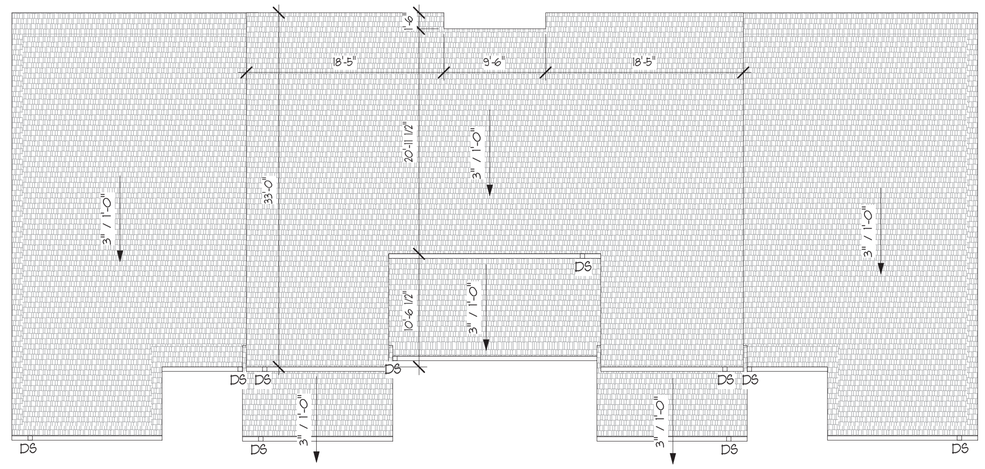

3 ROOF PLAN - BLDG. E
SC: 1/8" = 1'-0" RE: A2.1A

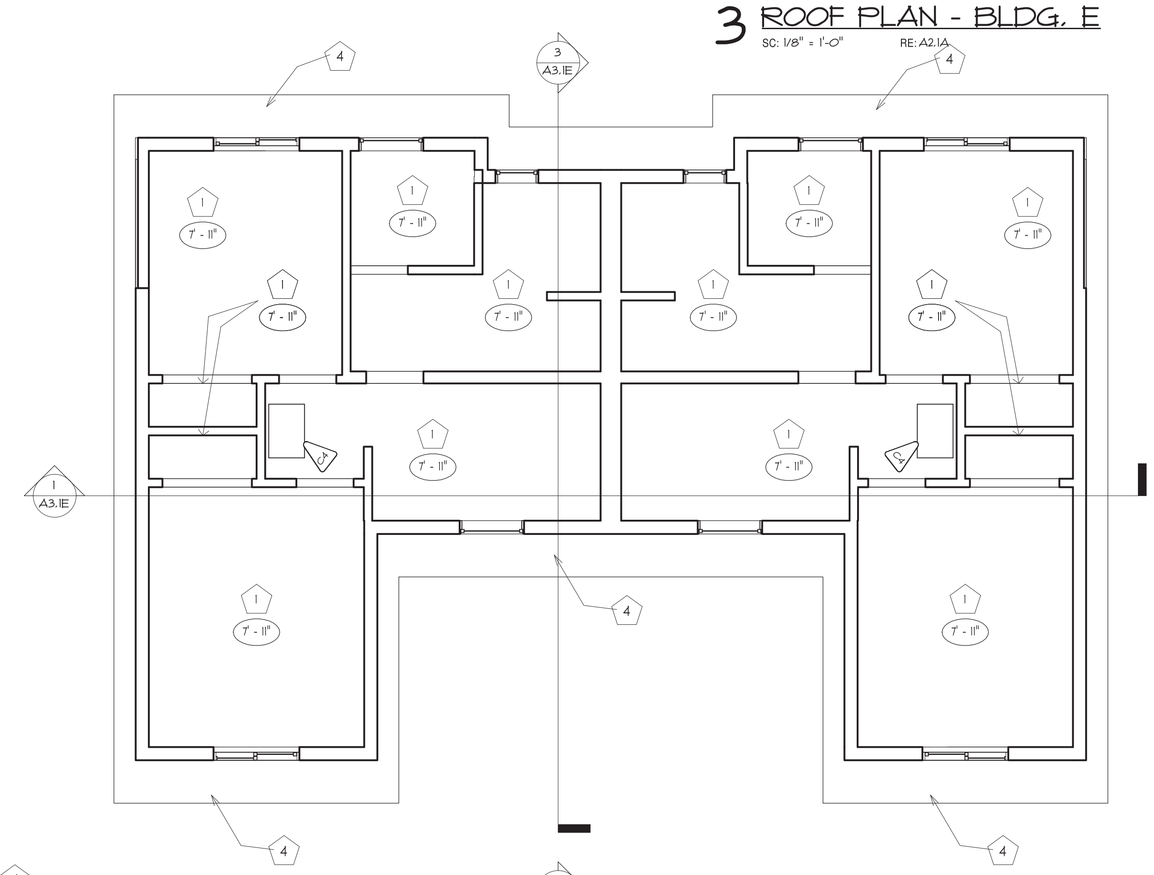

2nd FLOOR REFL. CEIL. PLAN - BLDG. E
2
SC: 1/4" = 1'-0" RE: A2.1A

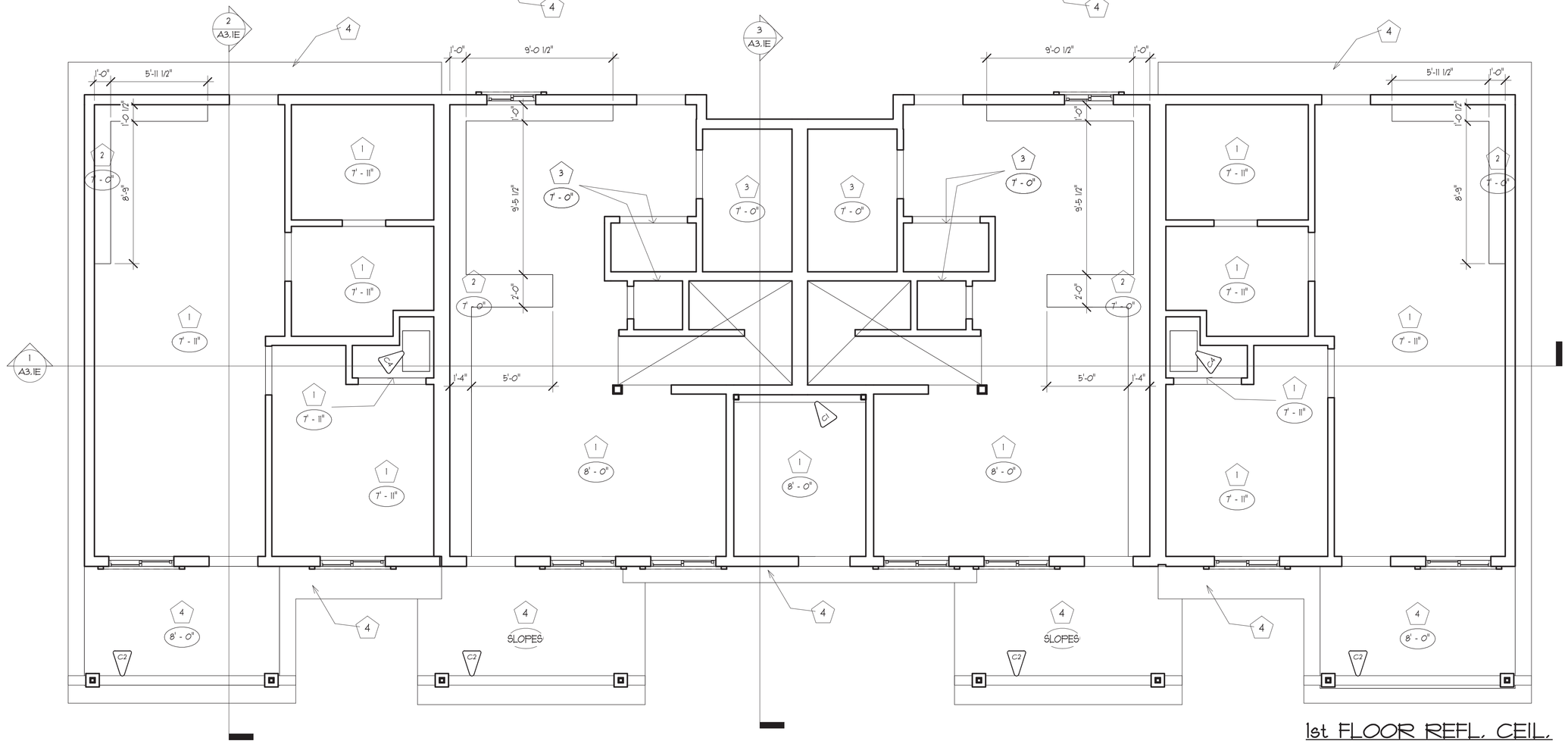

1st FLOOR REFL. CEIL. PLAN - BLDG. E
1
SC: 1/4" = 1'-0" RE: A2.1A

CEILING TYPES

Type Mark	Description
1	5/8" TYPE "X" GYP. BD. on ATTACHED to UNDERSIDE of FLOOR/ROOF FRM'G.
2	INTERIOR SOFFIT: 5/8" TYPE "X" GYP. BD. ATTACHED to 2x W.D. FRM'G. at 16" O.C.
3	SUSPENDED GYP. BD. CEILING: 5/8" TYPE "X" GYP. BD. ATTACHED to 2x W.D. FRM'G at 16" O.C., HANG from STRUCTURE ABOVE. XXXXXXX
4	EXTERIOR HARDBOARD SOFFIT: 5/8" HARDBOARD SOFFIT ATTACHED to UNDERSIDE of ROOF FRAMING

CEILING FLAG NOTES

Flag Note Number	NOTE
C1	WRAP BEAM with 5/8" TYPE "X" GYP. BD.
C2	WRAP BEAM at PORCH with PORTLAND CEMENT PLASTER-BASED (3) COAT STUCCO SYSTEM on MTL. DIAMOND LATH OVER (1) LAYER 15 lb. FELT
C3	PRE-FABRICATED METAL AWNING
C4	MIN. 20"x30" ATTIC ACCESS HATCH

IHG IE ARCHITECTS

HOUSING AUTHORITY CITY OF PUEBLO

UPLANDS TOWNHOMES
DEVELOPED BY THE HOUSING AUTHORITY OF PUEBLO
PROJECT No.: I.F.B. 17-524-RAD
ACERO AVE. and SPRAGUE AVE., PUEBLO, COLORADO 81004

DATE 03/29/2017
DRAWN JBB
CHECK RJH
REVISIONS:

SHEET A1.2E

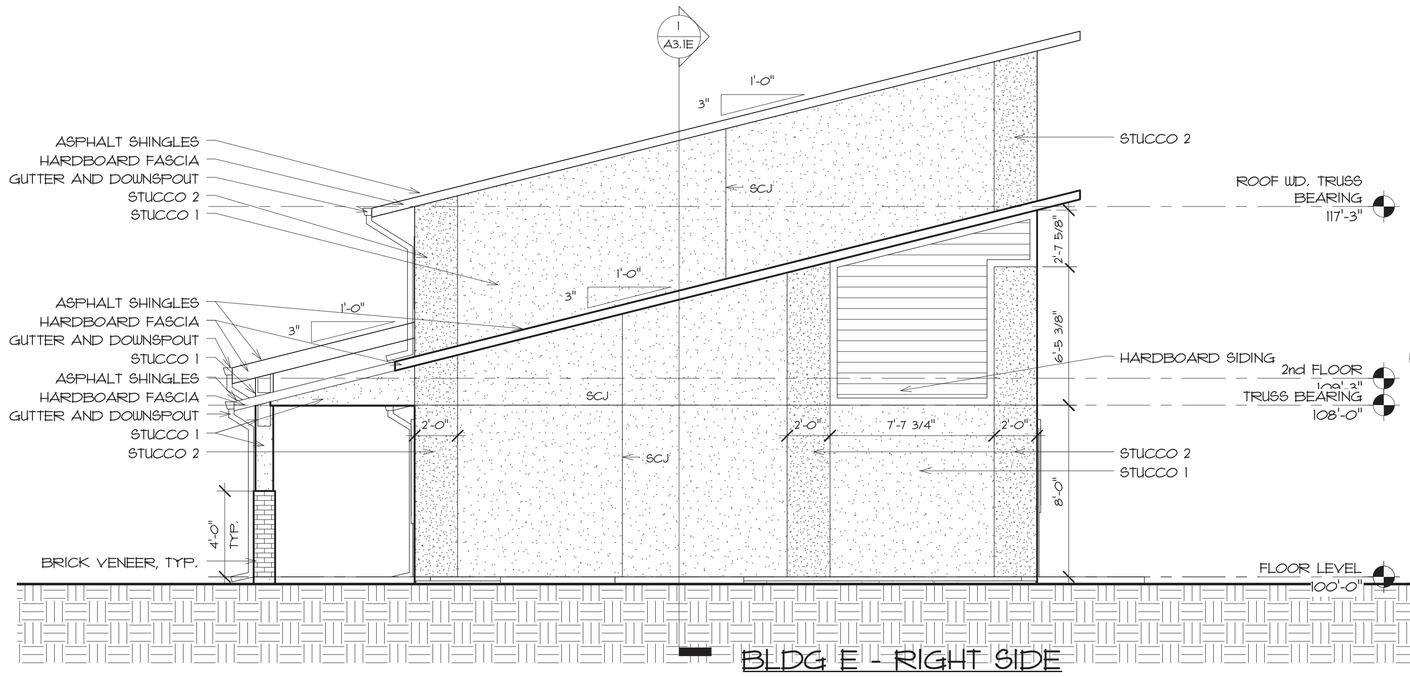

BLDG E - RIGHT SIDE ELEVATION 4

SC: 1/4" = 1'-0" RE:

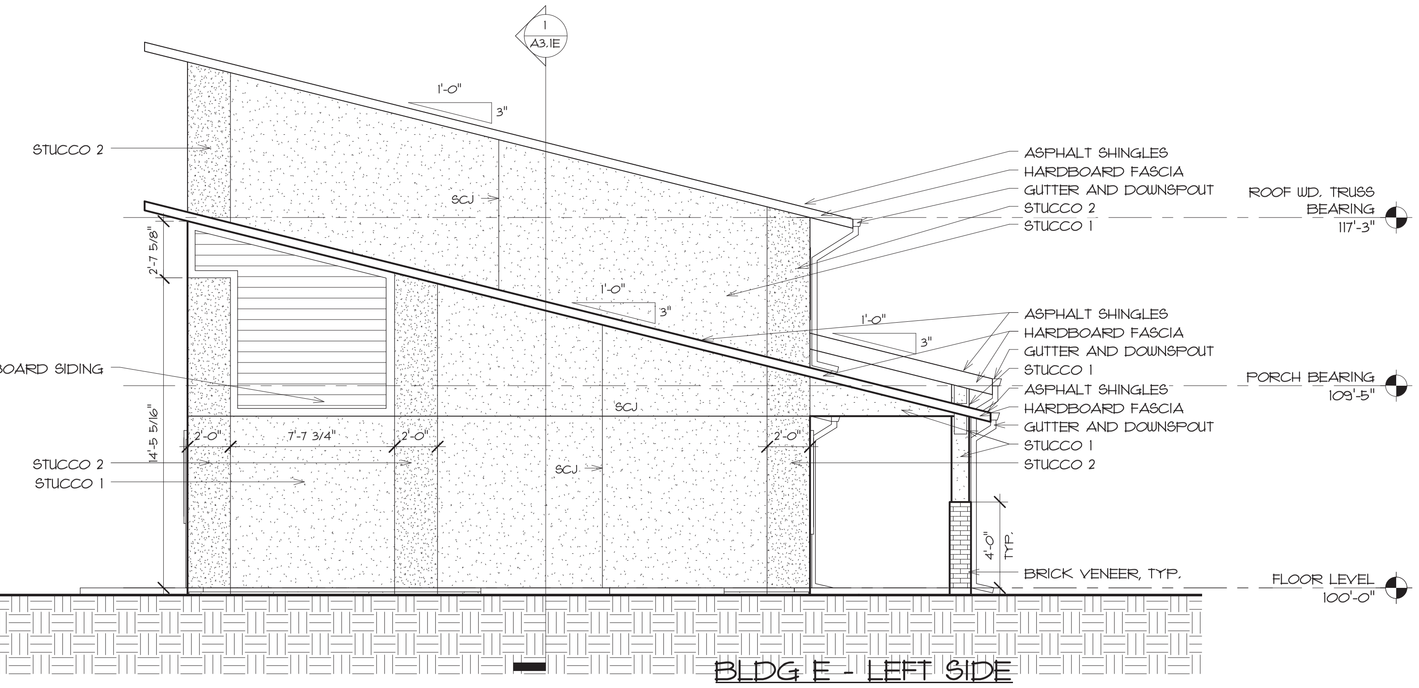

BLDG E - LEFT SIDE ELEVATION 3

SC: 1/4" = 1'-0" RE:

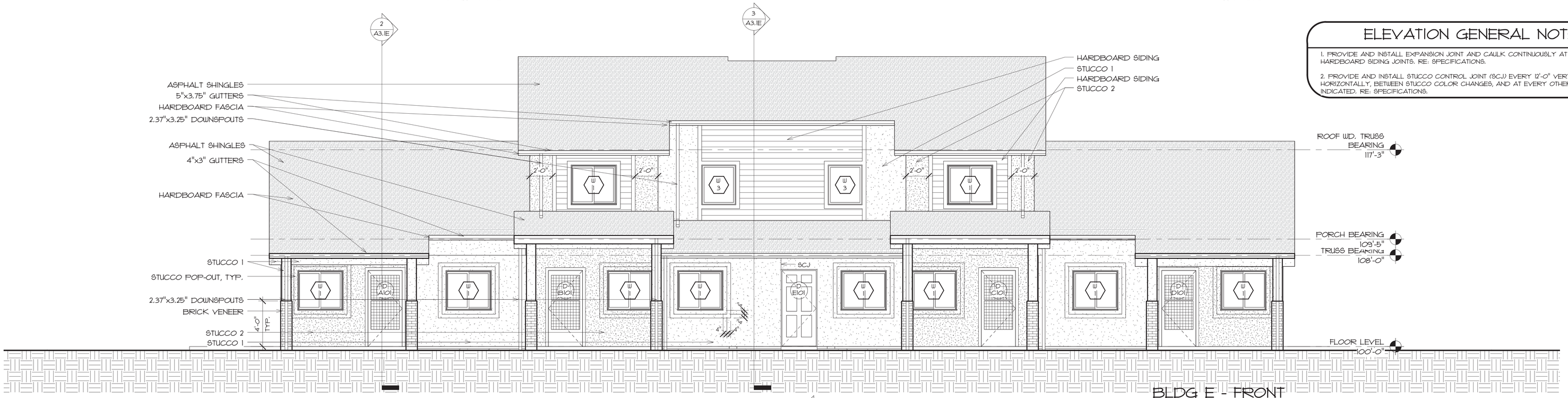

BLDG E - FRONT ELEVATION 2

SC: 1/4" = 1'-0" RE:

BLDG E - BACK ELEVATION 1

SC: 1/4" = 1'-0" RE:

ELEVATION GENERAL NOTES:

1. PROVIDE AND INSTALL EXPANSION JOINT AND CAULK CONTINUOUSLY AT ALL STUCCO TO HARDBOARD SIDING JOINTS. RE: SPECIFICATIONS.

2. PROVIDE AND INSTALL STUCCO CONTROL JOINT (SCJ) EVERY 12'-0" VERTICALLY AND HORIZONTALLY, BETWEEN STUCCO COLOR CHANGES, AND AT EVERY OTHER LOCATION INDICATED. RE: SPECIFICATIONS.

HOUSING AUTHORITY

THE CITY OF PUEBLO

HIGIE ARCHITECTS

UPLANDS TOWNHOMES

DEVELOPED BY THE HOUSING AUTHORITY OF PUEBLO

PROJECT No.: I.F.B. 17-524-RAD

ACERO AVE. and SPRAGUE AVE., PUEBLO, COLORADO 81004

DATE	03/29/2017
DRAWN	TR/JSB
CHECK	RJH
REVISIONS:	
SHEET	A2.1E

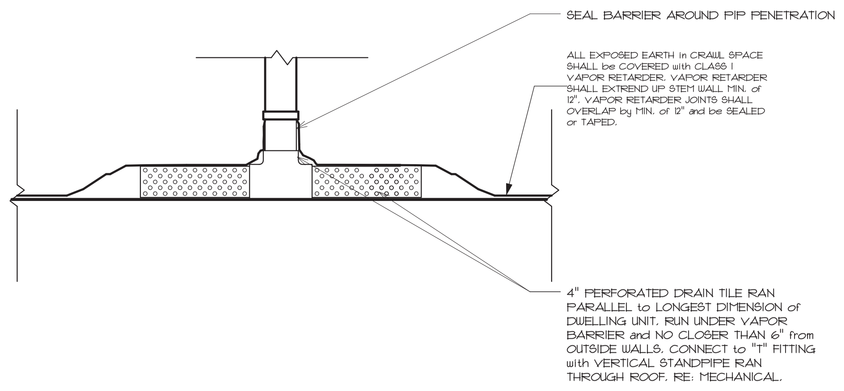

7 BLDG. E TYP. RADON VENT at CRAWL SPACE

SC: 1" = 1'-0" RE:

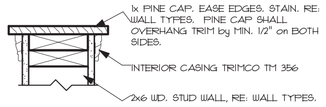

6 BLDG. E WD. CAP DETAIL at SLOPED STAIR WALL

SC: 1 1/2" = 1'-0" RE:

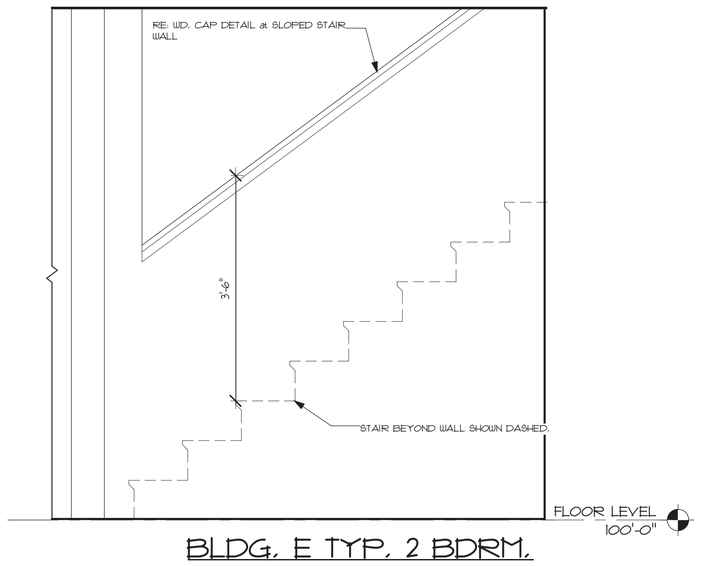

5 BLDG. E TYP. 2 BDRM. UNIT SLOPED WALL INT. ELEV. at 1st FLOOR STAIR

SC: 3/4" = 1'-0" RE: A1.1A

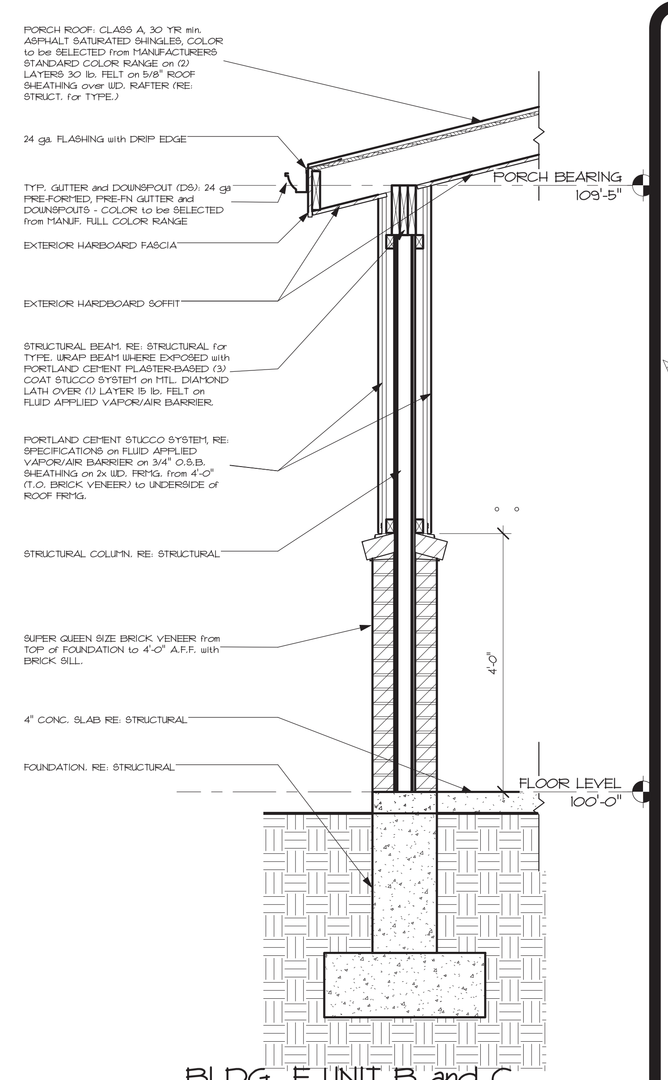

4 BLDG. E UNIT B and C TYP. PORCH COLUMN DETAIL

SC: 3/4" = 1'-0" RE: A1.1A

NOTE: PORCH COLUMN DETAIL SIM. at UNITS A and D, EXCEPT BEARING is at TRUSS BEARING at 108'-0" ELEV. and EXTERIOR HARDBOARD SOFFIT is at UNDERSIDE of ROOF TRUSS.

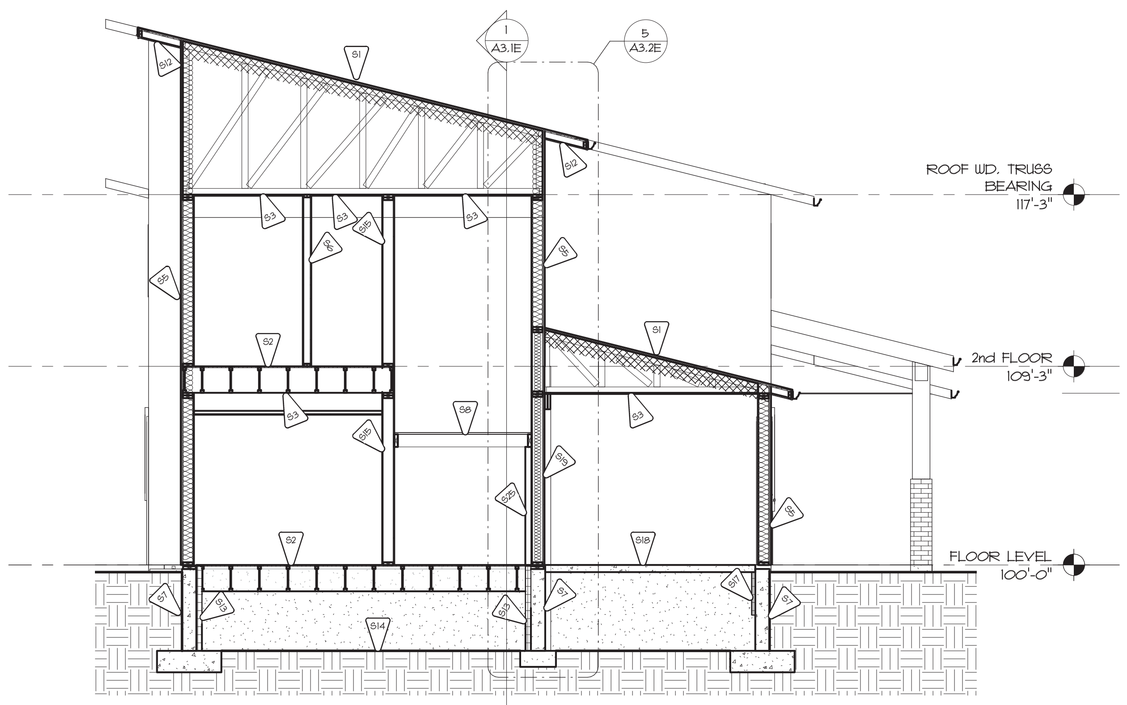

3 BLDG E CROSS SECTION 2

SC: 1/4" = 1'-0" RE: A1.1E

NOTE: CASEWORK/EQUIPMENT NOT SHOWN. REFER to INTERIOR ELEVATIONS for CASEWORK/EQUIPMENT

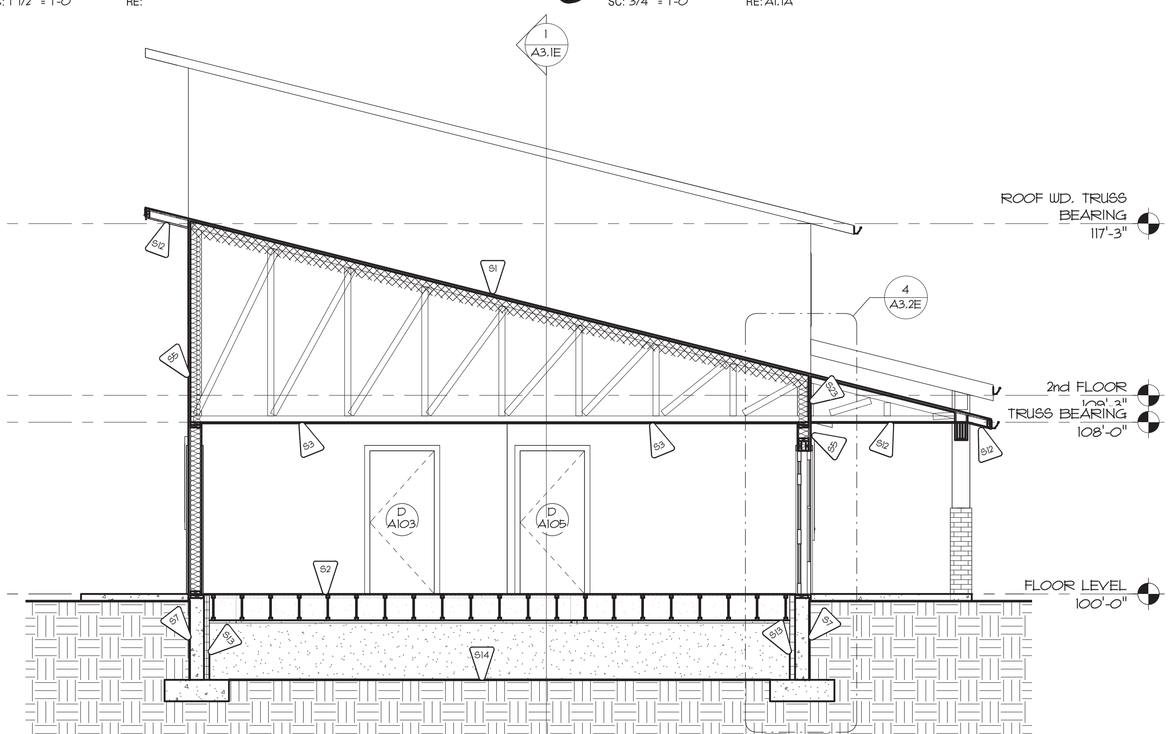

2 BLDG E CROSS SECTION 1

SC: 1/4" = 1'-0" RE: A1.1E

NOTE: CASEWORK/EQUIPMENT NOT SHOWN. REFER to INTERIOR ELEVATIONS for CASEWORK/EQUIPMENT

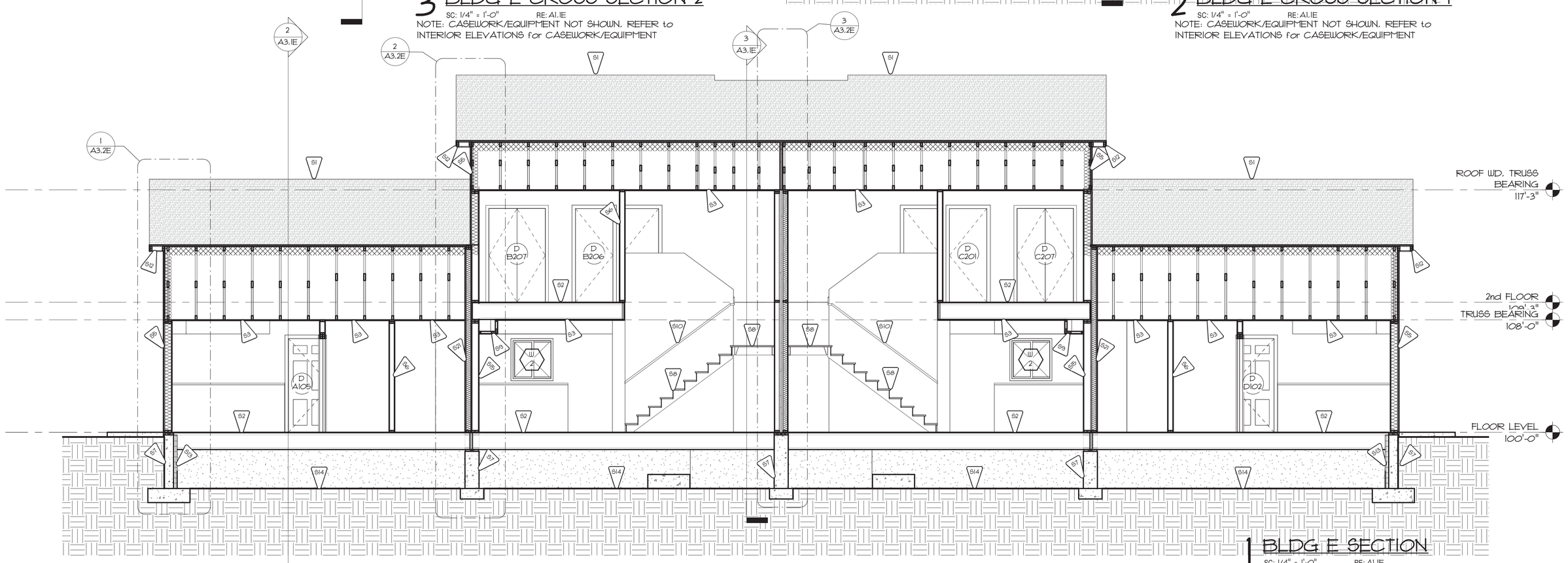

1 BLDG E SECTION

SC: 1/4" = 1'-0" RE: A1.1E

NOTE: CASEWORK/EQUIPMENT NOT SHOWN. REFER to INTERIOR ELEVATIONS for CASEWORK/EQUIPMENT

SECTION FLAG NOTES

Flag Note Number	NOTE
S1	CLASS A, 30 yr. min. ASPHALT SATURATED SHINGLES, COLOR to be SELECTED from MANUFACTURER'S STANDARD COLOR RANGE on (2) TWO LAYERS 30 lb. FELT on 5/8" ROOF SHEATHING (RE: STRUCTURAL for TYPE) over PRE-ENG. WOOD TRUSS. PROVIDE R-49 SPRAYED-ON CLOSED CELL FOAM INSUL. to UNDERSIDE of ROOF SHEATHING.
S2	FLOOR: 3/4" T&G PLYWD. over WD. I-JOIST at 16" O.C.
S3	FINISH CEILING: 5/8" TYPE "X" GYP. BD. on UNDERSIDE of ROOF/FLOOR FRMG.
S4	BEARING FIRE PARTITION SEPARATION WALL: (2) LAYERS 1" GYP. BD. FRAMED INSIDE of 2" MTL. C-RUNNERS with 3/4" AIR SPACE and 2x6 WD. FRMG. at 16" O.C. and 5/8" TYPE "X" GYP. BD. on BOTH SIDES. PROVIDE 3" MINERAL WOOL BATT. INSULATION in CAVITY of FRMG. PROVIDE AIR BARRIER/HOUSEWRAP between FRMG. and 5/8" TYPE "X" GYP. BD. on ONE SIDE ONLY. 2" MTL. C-RUNNER, GYP. BD. and 3/4" AIRSPACE CORE SHALL RUN from TOP of FOUNDATION to UNDERSIDE of ROOF SHEATHING ABOVE. RE: WALL SECTIONS UL DESIGN No. U336
S5	EXTERIOR LAP SIDING/STUCCO WALL. RE: WALL TYPES SHEE
S6	INTERIOR 2x4 WD. FRAMED WALL. RE: WALL TYPES,
S7	FOUNDATION, RE: STRUCTURAL
S8	WOOD STAIR RISERS and TREAD, DO NOT PENETRATE ADJACENT FIRE RATED WALLS with STAIR STRUCTURE.
S9	GYP. BD. SOFFIT: 5/8" TYPE "X" GYP. BD. on ONE SIDE of WD. FRAMG. BOTTOM of SOFFIT SHALL BE AT 7'-0" A.F.F. WIDTH VARIES. RE: REFLECTED CEILING PLANS
S10	WD. STAIR HAND RAIL at 3'-0" H. from FRONT EDGE of TREAD NOSING
S11	RAISED FLOOR/SLOPED CEILNG at STAIR: 2x WD. FRMG. at CLOSET FLOOR with 2x FRMG. at SLOPED CEILING with 5/8" TYPE "X" GYP. BD. on CEILING
S12	EXTERIOR NON-PERFORATED HARDBOARD SOFFIT
S13	CRAWL SPACE INSULATION: MIN. R-15 CONTINUOUS INSULATION EXTEND FROM the FLOOR ABOVE DOWN the FULL LENGTH of STEM WALL.
S14	ALL EXPOSED EARTH in CRAWL SPACE SHALL BE COVERED with CLASS I VAPOR RETARDER. VAPOR RETARDER SHALL EXTEND UP STEM WALL MIN. of 12". VAPOR RETARDER JOINST SHALL OVERLAP by MIN of 12" and be SEALED or TAPED.
S15	INTERIOR 2x6 WD. FRAMED WALL. RE: WALL TYPES,
S16	INTERIOR DOUBLE 2x4 STUD WALL. RE: WALL TYPES
S17	MIN. R-10 CONTINUOUS INSULATION RUN DOWN from UNDERSIDE of SLABS for 2'-0"
S18	4" THK. CONCRETE SLAB. RE: STRUCTURAL
S19	FIRE PARTITION SEPARATION WALL. RE: WALL TYPES
S20	SLOPED STAIR WALL WOOD WALL CAP, RE: WD. CAP DETAIL
S21	FIRE PARTITION SEPARATION WALL with SOUNDBOARD. RE: WALL TYPES
S22	CLASS A, 30 yr. min. ASPHALT SATURATED SHINGLES, COLOR to be SELECTED from MANUFACTURER'S STANDARD COLOR RANGE on (2) TWO LAYERS 30 lb. FELT on 5/8" ROOF SHEATHING (RE: STRUCTURAL for TYPE) over 2x WD. RAFTER (RE: STRUCTURAL)
S23	PROVIDE 1/2" THK. OSB with FLUID APPLIED VAPOR/AIR BARRIER at LINE of EXTERIOR WALL BELOW in TRUSS SPACE between INTERIOR and PORCH
S24	PORTLAND CEMEN STUCCO SYSTEM RE:SPECIFICATIONS -OR- FIBER CEMENT LAP SIDING on FLUID APPLIED VAPOR/AIR BARRIER on 3/4" O.S.B. SHEATHING on ROOF FRMG. PROVIDE MIN. R-20 CLOSED CELL SPRAYED ON INSULATION on INSIDE of EXTERIOR SHEATHING in ATTIC SPACE
S25	STAIR PONY WALL: 2x4 WD. FRMG at 24" O.C. from TOP of FLOOR to UNDERSIDE of STAIR LANDING. SET NEXT to SINGLE 2x6 STUD FIRE RATED WALL.

GENERAL NOTES:

G AT ALL EXTERIOR SLABS LOCATED DIRECTLY ADJACENT to BUILDING FOUNDATIONS: TIE CONC. PAD to FOUNDATION with #4 REBAR DOWEL @ 24"O.C.. TYP.

IHGIE ARCHITECTS

HOUSING AUTHORITY THE CITY OF PUEBLO

UPLANDS TOWNHOMES
DEVELOPED BY THE HOUSING AUTHORITY OF PUEBLO
PROJECT No.: I.F.B. 17-524-RAD
ACERO AVE. and SPRAGUE AVE., PUEBLO, COLORADO 81004

DATE	03/29/2017
DRAWN	JSB
CHECK	RJH
REVISIONS:	
SHEET	A3.1E

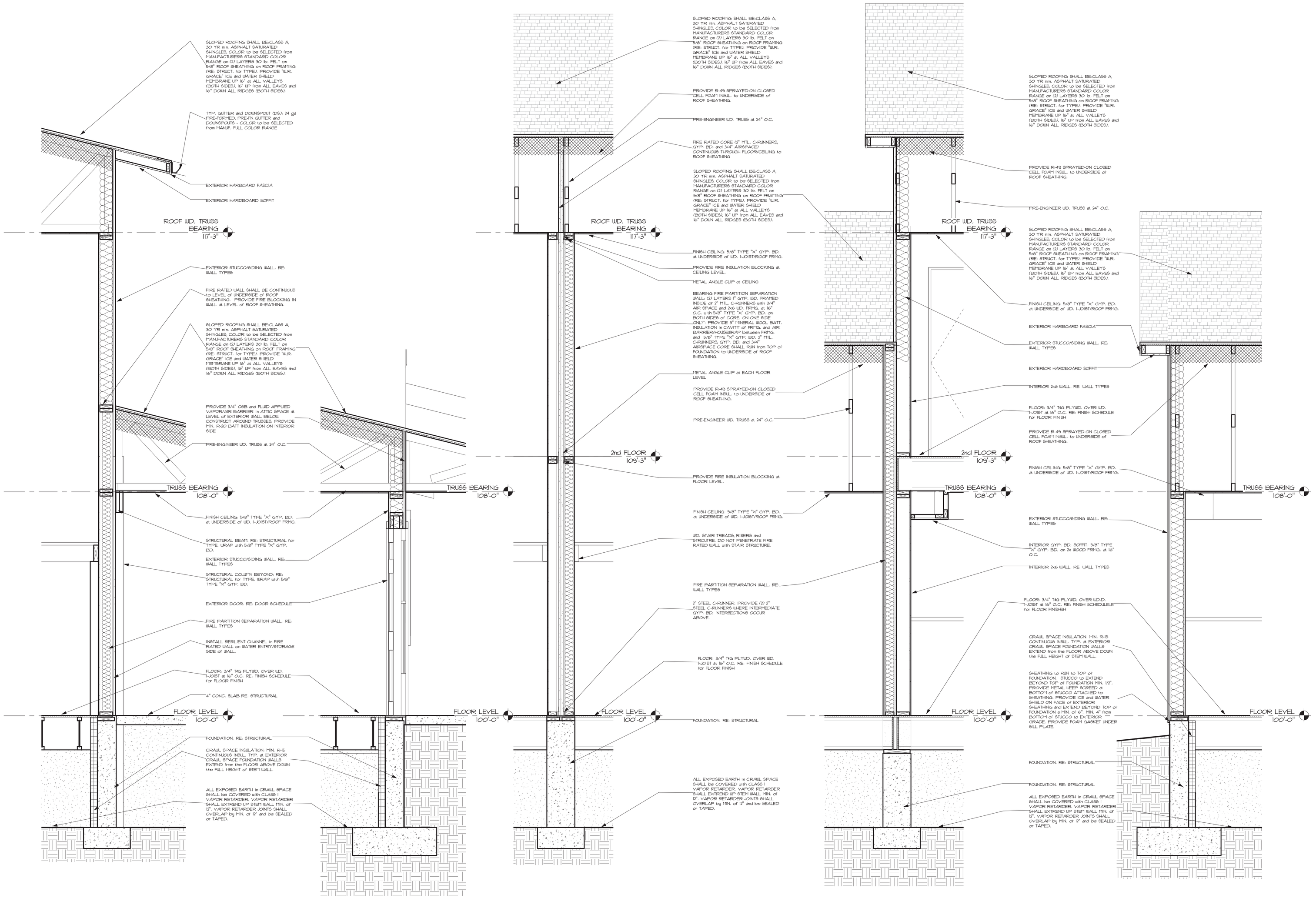

5 BLDG E WALL SECTION 5
SC: 3/4" = 1'-0" RE: A3.1E

4 BLDG E WALL SECTION 4
SC: 3/4" = 1'-0" RE: A3.1E

3 BLDG E WALL SECTION 3
SC: 3/4" = 1'-0" RE: A3.1E

2 BLDG E WALL SECTION 2
SC: 3/4" = 1'-0" RE: A3.1E

1 BLDG E WALL SECTION 1
SC: 3/4" = 1'-0" RE: A3.1E

HOUSING AUTHORITY CITY OF PUEBLO

IHGIE ARCHITECTS

UPLANDS TOWNHOMES
DEVELOPED BY THE HOUSING AUTHORITY OF PUEBLO
PROJECT No.: I.F.B 17-524-RAD
ACERO AVE. and SPRAGUE AVE., PUEBLO, COLORADO 81004

DATE	03/29/2017
DRAWN	JSB
CHECK	RJH
REVISIONS:	
SHEET	A3.2E

EXTERIOR ENTRY DOORS TYPES:
RE: 1 AND 2, THIS SHEET

INTERIOR DOORS TYPES:
RE: FLOOR PLANS FOR DOOR DOOR LOCATIONS

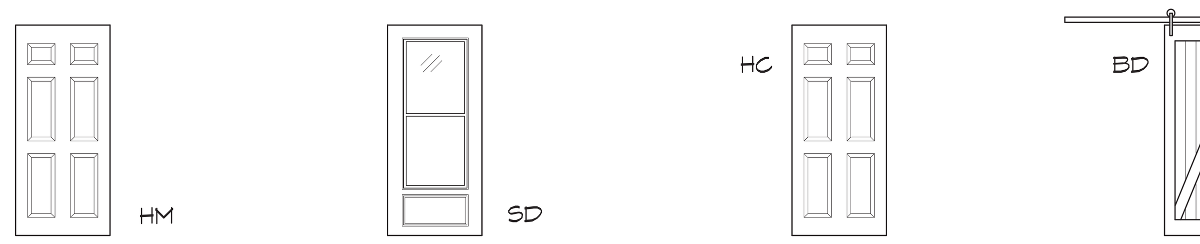

HM: FACTORY PRIMED METAL CLAD INSULATED DOOR, PREP PER DOOR FINISH HARDWARE, ON PRE HUNG FRAME. PAINT WITH ENAMEL PAINT.
BenchHM/SDark by Therma-tru or approved equal.
RE: 1 AND 2, THIS SHEET

SD: 3068 LARSON MANUFACTURING STORM DOOR. MODEL 830-80 COLOR WHITE, BRASS. INSTALL W/ HINGES TO BUTT WITH ENTRY DOOR. INSTALL OVER BRICK MOLD. HARDWARE BY MANUFACTURE

HC: MASONITE 6 PANEL TEXTURED DOOR, PRE HUNG. PAINT WITH (2) COATS OF SEMI-GLOSS LATEX ENAMEL.

BD: BARN DOOR
36"x84"
MATTE BLACK HARDWARE
(2) COATS OF SEMI-GLOSS LATEX ENAMEL.
EQUAL TO "ARTISAN HARDWARE" Z SLIDING BARN DOOR, PAINTED.

DOOR FRAME TYPES:

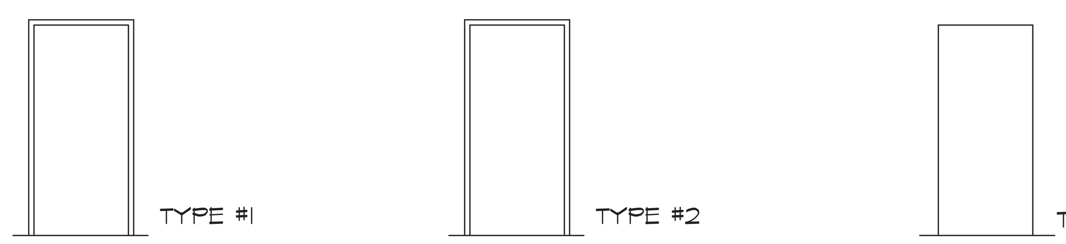

TYPE #1: TWO PIECE STEEL ADJUSTABLE FRAME- FACTORY PRIMED AND FINISH W/ (2) COATS ENAMEL PAINT. INTERIOR CASING TRIMCO TM 356 EXTERIOR BRICK MOLD VINYL COVERED COMPOSITE.
RE: 5,6 AND 7 THIS SHEET

TYPE #2: PRE-HUNG FINGER JOINTED PINE FRAME, WITH TRIMCO TM-356 CASING. PRIME AND PAINT WITH (2) COATS OF LATEX ENAMEL, SEMI GLOSS.

TYPE #3: GYPSUM BOARD WRAPPED OPENING, 3/4" BULLNOSE OUTSIDE CORNERS FACTORY FINISHED DOOR TRACT AND HARDWARE BY MANUFACTURER.

WINDOW TYPES:
RE: 3 AND 4, THIS SHEET FOR HEAD AND SILL SECTIONS.
RE: 5, THIS SHEET FOR WINDOW INSTALLATION DETAIL.

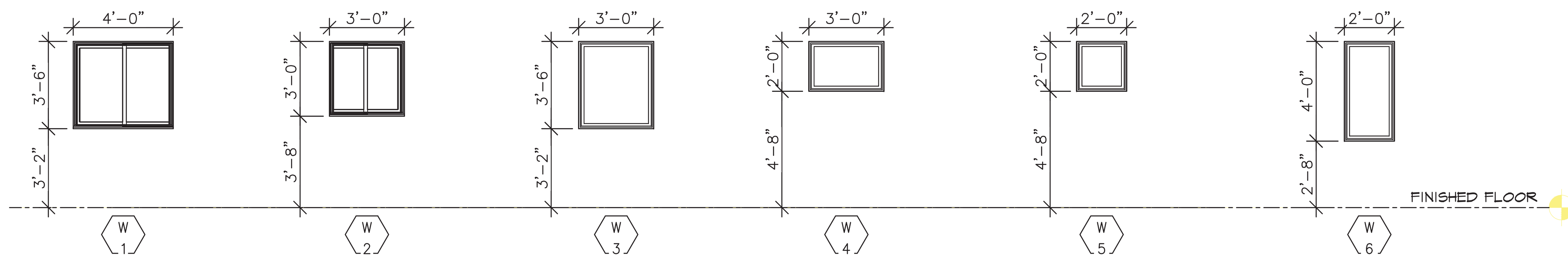

W1: FIBERGLASS HORIZONTAL SLIDER COLOR TO BE SELECTED FROM MANUFACTURER STANDARD COLOR RANGE. RE: SPECIFICATIONS, WITH INSECT SCREEN

W2: FIBERGLASS HORIZONTAL SLIDER COLOR TO BE SELECTED FROM MANUFACTURER STANDARD COLOR RANGE. RE: SPECIFICATIONS, WITH INSECT SCREEN

W3: FIBERGLASS FIXED COLOR TO BE SELECTED FROM MANUFACTURER STANDARD COLOR RANGE. RE: SPECIFICATIONS.

W4: FIBERGLASS FIXED COLOR TO BE SELECTED FROM MANUFACTURER STANDARD COLOR RANGE. RE: SPECIFICATIONS.

W5: FIBERGLASS FIXED COLOR TO BE SELECTED FROM MANUFACTURER STANDARD COLOR RANGE. RE: SPECIFICATIONS, TRANSLUCENT GLAZING TEMPERED

W6: FIBERGLASS FIXED COLOR TO BE SELECTED FROM MANUFACTURER STANDARD COLOR RANGE. RE: SPECIFICATIONS, TEMPERED

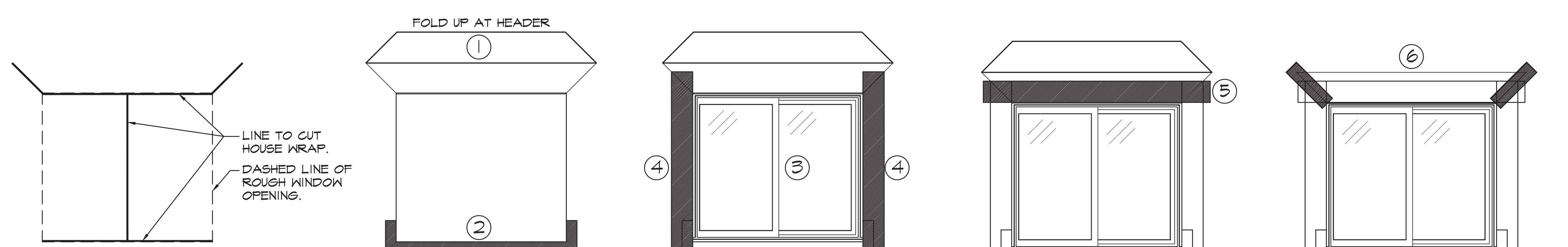

STEP 1. PREPARE THE HOUSE WRAP AT THE ROUGH OPENING: CUT HOUSE WRAP AT HEAVY LINE, FOLD IN AT JAMBS AND FOLD UP AT HEADER.

STEP 2. INSTALL PAN FLASHING: (ICE AND WATER SHIELD) COVER ROUGH SILL AND EXTEND ONTO THE FACE OF THE WALL.

STEP 3. INSTALL THE WINDOW: ACCORDING TO MANUFACTURER'S INSTRUCTIONS.
STEP 4. INSTALL THE JAMB FLASHING: OVER WINDOW FLANGE AND PAN FLASHING AND EXTEND ABOVE THE HEAD FLANGE.

STEP 5. INSTALL THE HEAD FLASHING: OVER AND BEYOND THE JAMB FLASHING. (AND OVER DRIP CAP IF INSTALLED).

STEP 6. INTEGRATE THE HOUSE WRAP: FOLD DOWN THE HOUSE WRAP AND TAPE DIAGONAL SEEMS WITH CONSTRUCTION TAPE.

5 WINDOW INSTALLATION DETAIL
SCALE: 1/2" = 1'-0"

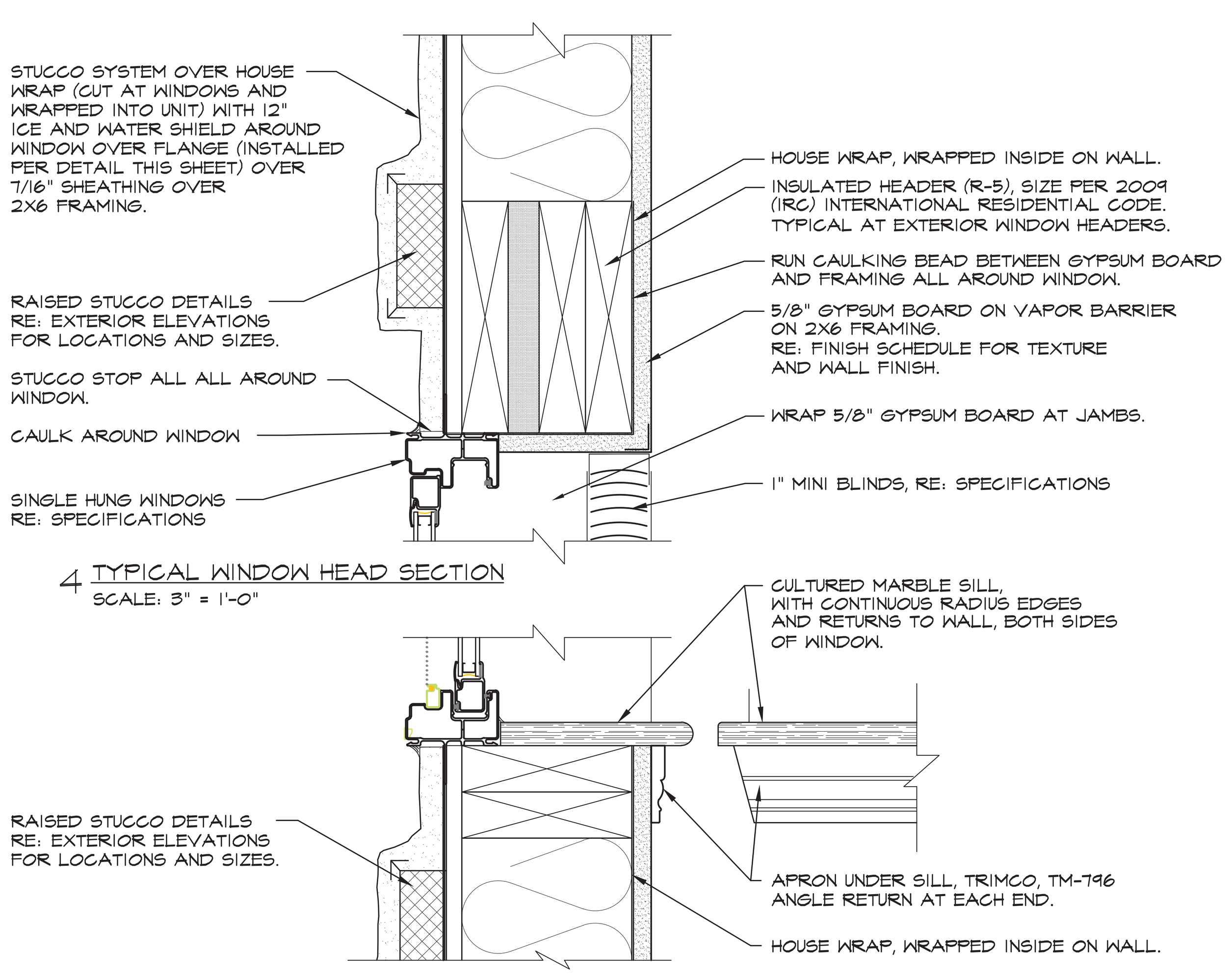

4 TYPICAL WINDOW HEAD SECTION
SCALE: 3" = 1'-0"

3 TYPICAL WINDOW SILL SECTION
SCALE: 3" = 1'-0"

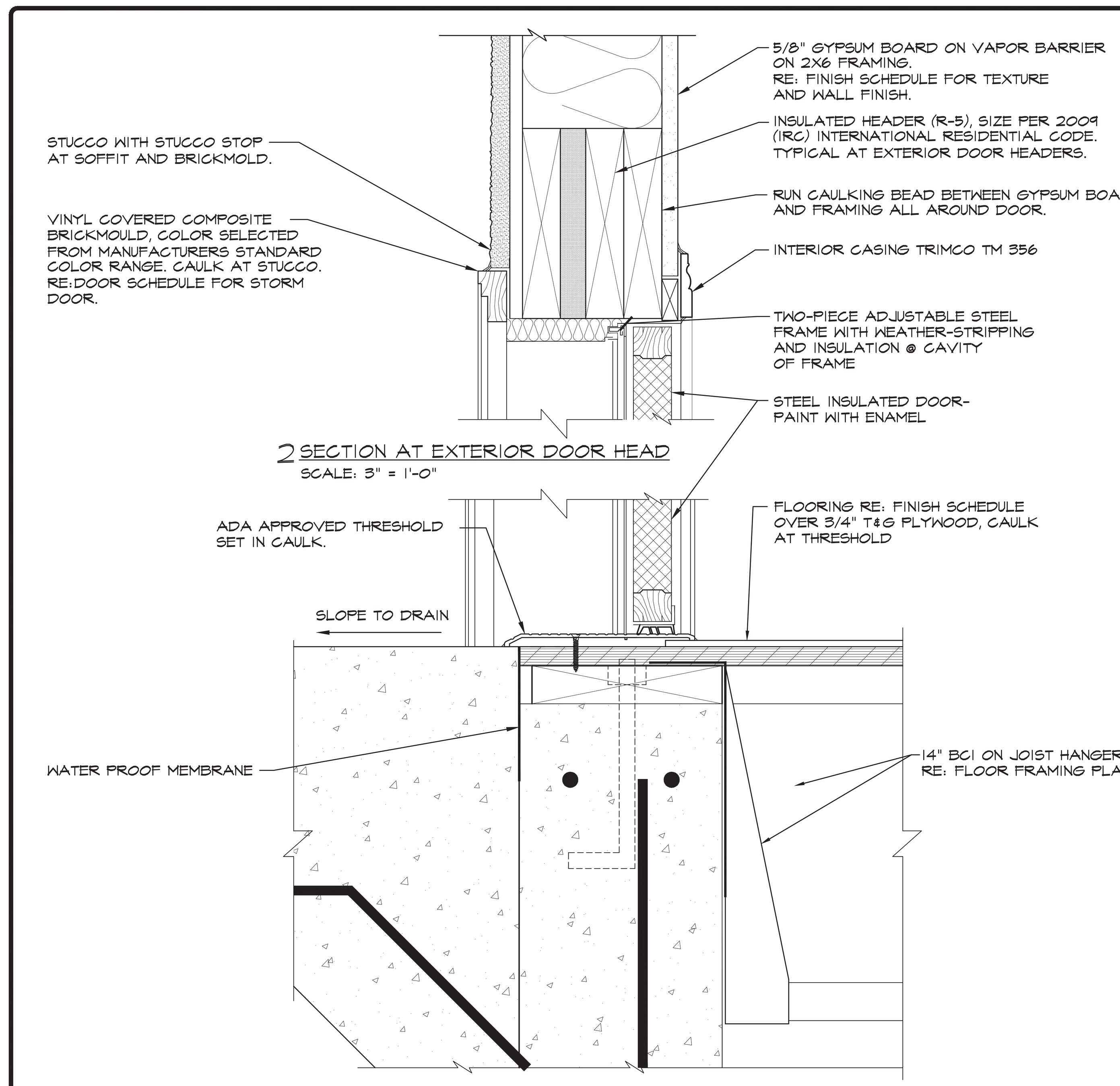

2 SECTION AT EXTERIOR DOOR HEAD
SCALE: 3" = 1'-0"

1 SECTION AT EXTERIOR DOOR THRESHOLD
SCALE: 3" = 1'-0"

DOOR SCHEDULE BUILDING TYPE E

UNIT TYPE	DOOR NO.	DOOR SIZE	DOOR TYPE	DOOR MATERIAL	DOOR FINISH	HARDWARE	FRAME TYPE	FRAME MATERIAL	FRAME FINISH	NOTES
UNIT TYPE "A" (D A101)		FIRST FLOOR UNIT TYPE "A"								
	A101	3'-0" X 6'-8" X 1 3/4"	HM/SD	METAL	EN-1	G	1	METAL	EN-1	
	A102	3'-0" X 6'-8" X 1 3/4"	HM/SD	METAL	EN-1	G	1	METAL	EN-1	
	A103	3'-0" X 6'-8" X 1 3/8"	HC	HARD BOARD	LE-1	C	2	WOOD	LE-1	
	A104	3'-0" X 7'-0" X 1 1/2"	BD	HARD BOARD	LE-1	F	3	WOOD	LE-1	R.O. 2'-8" x 6'-8"
	A105	3'-0" X 6'-8" X 1 3/8"	HC	HARD BOARD	LE-1	B	2	WOOD	LE-1	
	A106	4'-0" X 6'-8" X 1 3/8" (PAIR)	HC	HARD BOARD	LE-1	D	2	WOOD	LE-1	
UNIT TYPE "B" (D B101)		FIRST FLOOR UNIT TYPE "B"								
	B101	3'-0" X 6'-8" X 1 3/4"	HM/SD	METAL	EN-1	A	1	METAL	EN-1	
	B102	3'-0" X 6'-8" X 1 3/4"	HM/SD	METAL	EN-1	A	1	METAL	EN-1	
	B103	3'-0" X 6'-8" X 1 3/8"	HC	HARD BOARD	LE-1	C	2	WOOD	LE-1	
	B104	4'-0" X 6'-8" X 1 3/8" (PAIR)	HC	HARD BOARD	LE-1	D	2	WOOD	LE-1	
	B105	2'-0" X 6'-8" X 1 3/8"	HC	HARD BOARD	LE-1	B	2	WOOD	LE-1	
		SECOND FLOOR UNIT TYPE "B"								
	B202	2'-8" X 6'-8" X 1 3/8"	HC	HARD BOARD	LE-1	C	2	WOOD	LE-1	
	B203	3'-0" X 7'-0" X 1 1/2"	BD	HARD BOARD	LE-1	F	3	WOOD	LE-1	R.O. 2'-8" x 6'-8"
	B204	2'-8" X 6'-8" X 1 3/8"	HC	HARD BOARD	LE-1	B	2	WOOD	LE-1	
	B205	4'-0" X 6'-8" X 1 3/8" (PAIR)	HC	HARD BOARD	LE-1	D	2	WOOD	LE-1	
	B206	2'-8" X 6'-8" X 1 3/8"	HC	HARD BOARD	LE-1	B	2	WOOD	LE-1	
	B207	4'-0" X 6'-8" X 1 3/8" (PAIR)	HC	HARD BOARD	LE-1	D	2	WOOD	LE-1	
UNIT TYPE "C" (D C101)		FIRST FLOOR UNIT TYPE "C"								
	C101	3'-0" X 6'-8" X 1 3/4"	HM/SD	METAL	EN-1	A	1	METAL	EN-1	
	C102	3'-0" X 6'-8" X 1 3/4"	HM/SD	METAL	EN-1	A	1	METAL	EN-1	
	C103	3'-0" X 6'-8" X 1 3/8"	HC	HARD BOARD	LE-1	C	2	WOOD	LE-1	
	C104	4'-0" X 6'-8" X 1 3/8" (PAIR)	HC	HARD BOARD	LE-1	D	2	WOOD	LE-1	
	C105	2'-0" X 6'-8" X 1 3/8"	HC	HARD BOARD	LE-1	B	2	WOOD	LE-1	
		SECOND FLOOR UNIT TYPE "C"								
	C202	2'-8" X 6'-8" X 1 3/8"	HC	HARD BOARD	LE-1	C	2	WOOD	LE-1	
	C203	3'-0" X 7'-0" X 1 1/2"	BD	HARD BOARD	LE-1	F	3	WOOD	LE-1	R.O. 2'-8" x 6'-8"
	C204	2'-8" X 6'-8" X 1 3/8"	HC	HARD BOARD	LE-1	B	2	WOOD	LE-1	
	C205	4'-0" X 6'-8" X 1 3/8" (PAIR)	HC	HARD BOARD	LE-1	D	2	WOOD	LE-1	
	C206	2'-8" X 6'-8" X 1 3/8"	HC	HARD BOARD	LE-1	B	2	WOOD	LE-1	
	C207	4'-0" X 6'-8" X 1 3/8" (PAIR)	HC	HARD BOARD	LE-1	D	2	WOOD	LE-1	
UNIT TYPE "D" (D D101)		FIRST FLOOR UNIT TYPE "D"								
	D101	3'-0" X 6'-8" X 1 3/4"	HM/SD	METAL	EN-1	G	1	METAL	EN-1	
	D102	3'-0" X 6'-8" X 1 3/4"	HM/SD	METAL	EN-1	G	1	METAL	EN-1	
	D103	3'-0" X 6'-8" X 1 3/8"	HC	HARD BOARD	LE-1	C	2	WOOD	LE-1	
	D104	3'-0" X 7'-0" X 1 1/2"	BD	HARD BOARD	LE-1	F	3	WOOD	LE-1	R.O. 2'-8" x 6'-8"
	D105	3'-0" X 6'-8" X 1 3/8"	HC	HARD BOARD	LE-1	B	2	WOOD	LE-1	
	D106	4'-0" X 6'-8" X 1 3/8" (PAIR)	HC	HARD BOARD	LE-1	D	2	WOOD	LE-1	
(D E101)		BUILDING EXTERIOR DOORS, WATER ENTRY								
	E101	3'-0" X 6'-8" X 1 3/4"	HM/SD	METAL	EN-1	E	1	METAL	EN-1	

COLOR NOTES:

LE-1 — DOORS AND FRAMES:
LATEX ENAMEL (LE)
APPROVE MANUFACTURE COLOR TO BE SELECTED FROM THE MANUFACTURERS TOTAL COLOR RANGE.
RE: SPECIFICATIONS

EN-1 — ENAMEL (EN)
APPROVE MANUFACTURE COLOR TO BE SELECTED FROM THE MANUFACTURERS TOTAL COLOR RANGE.
RE: SPECIFICATIONS
NOTE: CONTRACTOR TO ALLOW FOR (4) EXTERIOR BUILDING COLOR SCHEMES AT FRONT AND BACK ENTRY DOORS. INTERIOR OF DOORS AND FRAMES TO MATCH LE-1.

DOOR HARDWARE

SET A (FRONT, BACK ENTRY DOORS):
DEADBOLT BC 160R, E 605 REMOVABLE CORE. F10 ELAN PASSAGE, WEATHER STRIP, STOP, 1 1/2 PAIR HINGES
ADA APPROVED THRESHOLD, ROCKWOOD #620 VIEWER
INSTALL VIEWER AT 60" A.F.F.
STORM DOOR TO HAVE FACTORY HARDWARE.

SET B (BEDROOMS, CLOSET WITH SINGLE DOOR):
PRE-HUNG HINGES BY MFG.; F10 ELAN, 605, PASSAGE, STOP

SET C (TOILET & BATH ROOMS):
F40 ELAN, 605, PRIVACY, STOP

SET D (CLOSETS WITH DOUBLE DOORS):
PRE-HUNG HINGES BY MFG.; DUMMY TRIM F10 ELAN
PROVIDE SPRING CATCHES (EACH LEAF)
ONE FLOOR AND ONE HINGE STOP

SET E (EXTERIOR STORAGE AND WATER ENTRY DOORS):
DEADBOLT BC 160R, E 605 REMOVABLE CORE. F10 ELAN PASSAGE, WEATHER STRIP, STOP, 1 1/2 PAIR HINGES
ADA APPROVED THRESHOLD

SET F (BARN DOOR):
HARDWARE BY MANUFACTURE, COLOR BLACK.
RE: INTERIOR DOOR TYPES

AT DOORS, STOP, ROCKWOOD 1/2" BASE, DOME STOP #442, 605, UNLESS CALLED OUT OTHERWISE.

IHGIF ARCHITECTS
UPLANDS TOWNHOMES
DEVELOPED BY THE HOUSING AUTHORITY OF PUEBLO
PROJECT No.: I.F.B. 17-524-RAD
ACERO AVE. and SPRAGUE AVE., PUEBLO, COLORADO 81004
DATE 3-29-17
DRAWN JC
CHECK XXX
REVISIONS:
SHEET A4.1E
F:Uplands Townhomes\HAP Drawings
Door & Finish Schedules, Interior Elevations

UNIT TYPE A

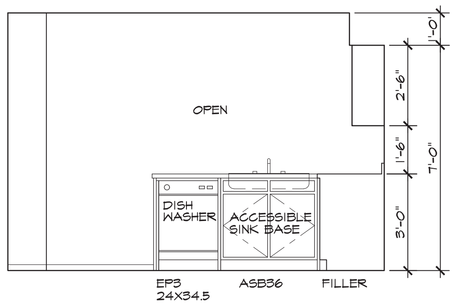

1 KITCHEN ELEVATION C
SCALE 3/8" = 1'-0" A102

BUILDING TYPE E

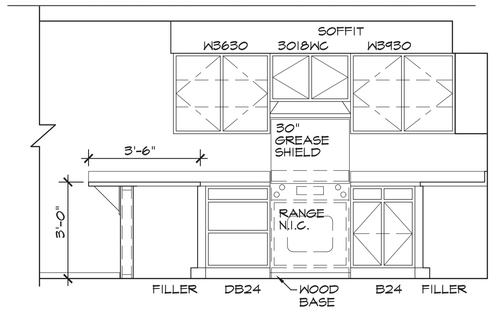

2 KITCHEN ELEVATION D
SCALE 3/8" = 1'-0" A102

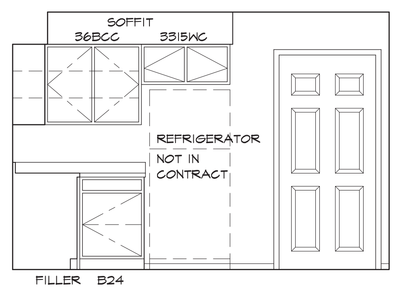

3 KITCHEN ELEVATION A
SCALE 3/8" = 1'-0" A102

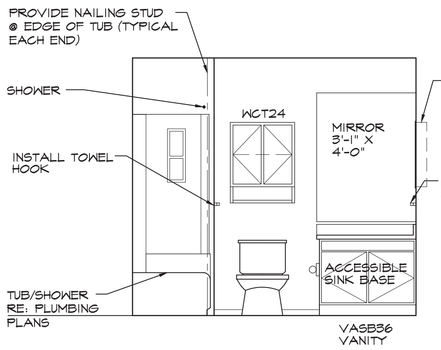

4 TOILET ELEVATION C
SCALE 3/8" = 1'-0" A103

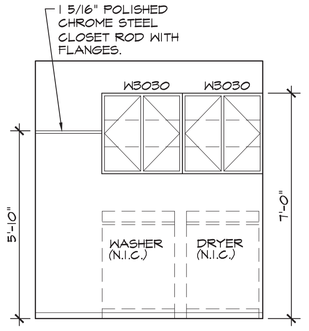

5 MECH/LAUNDRY ELEVATION D
SCALE 3/8" = 1'-0" A104

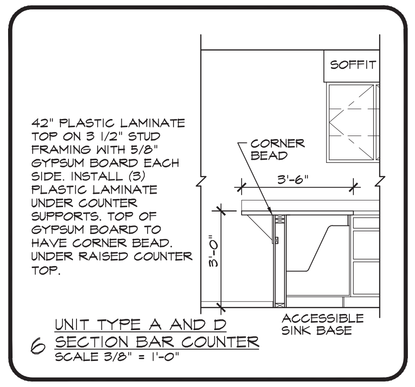

UNIT TYPE A AND D
6 SECTION BAR COUNTER
SCALE 3/8" = 1'-0"

UNIT TYPE B

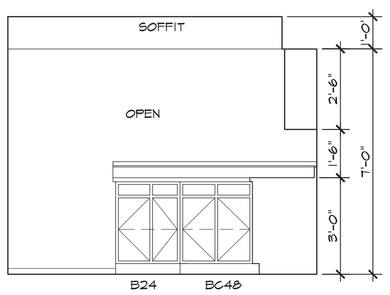

7 KITCHEN ELEVATION C
SCALE 3/8" = 1'-0" B102

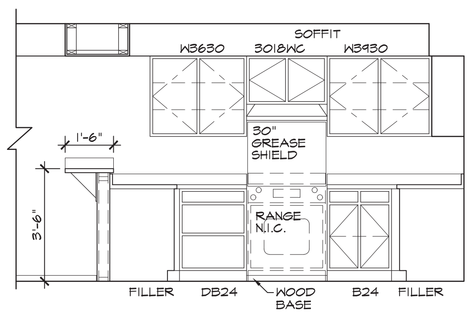

8 KITCHEN ELEVATION D
SCALE 3/8" = 1'-0" B102

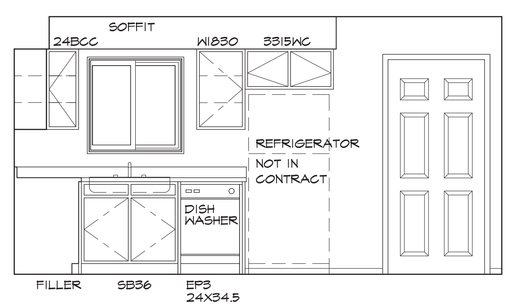

9 KITCHEN ELEVATION A
SCALE 3/8" = 1'-0" B102

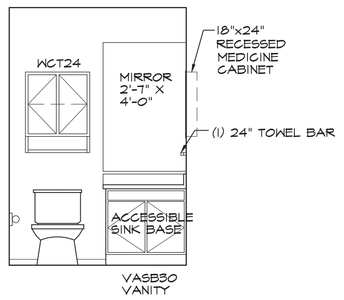

10 TOILET ELEVATION C
SCALE 3/8" = 1'-0" B103

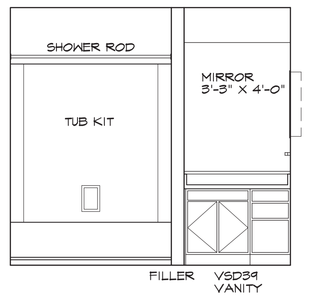

11 BATH ELEVATION B
SCALE 3/8" = 1'-0" B202

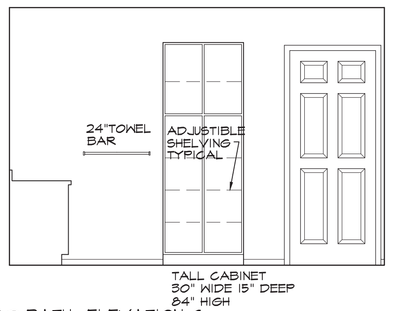

12 BATH ELEVATION C
SCALE 3/8" = 1'-0" B202

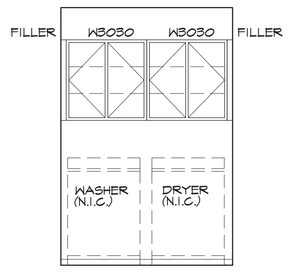

13 LAUNDRY ELEVATION B
SCALE 3/8" = 1'-0" B203

COLOR NOTES:

FLOORS:

SV-1 SHEET VINYL (SV)
APPROVED MANUFACTURER, COLOR AND PATTERN TO BE SELECTED FROM MANUFACTURERS STANDARD COLOR RANGE. RE: SPECIFICATIONS
TO BE INSTALL OVER "ULTRAPLY" PREMIUM UNDERLAYMENT BY MORELAND CO..

LVT-1 LUXURY VINYL TILE (LVT)
APPROVED MANUFACTURER, COLOR AND PATTERN TO BE SELECTED FROM MANUFACTURERS STANDARD COLOR RANGE. RE: SPECIFICATIONS
TO BE INSTALLED OVER "ULTRAPLY" PREMIUM UNDERLAYMENT BY MORELAND CO.

SLR-1 SEALER (SLR)
APPROVED MANUFACTURER, COLOR GRAY. RE: SPECIFICATIONS

BASE:

WD-1 WOOD BASE (WD)
TRIMCO MILLWORK 444, 9/16" X 3 1/4" PAINT WITH LE-1, SEMI-GLOSS.

RB-1 RUBBER BASE (RB)
4" RUBBER BASE WITH COVED TOE. APPROVED MANUFACTURER COLOR TO BE SELECTED FROM THE MANUFACTURERS TOTAL COLOR RANGE.

WALLS:

LE-1 LATEX ENAMEL (LE)
APPROVE MANUFACTURE COLOR TO BE SELECTED FROM THE MANUFACTURERS TOTAL COLOR RANGE. RE: SPECIFICATIONS

LE-2 ACCENT WALL (LE)
APPROVE MANUFACTURE COLOR TO BE SELECTED FROM THE MANUFACTURERS TOTAL COLOR RANGE. RE: SPECIFICATIONS

CEILINGS:

LE-1 LATEX ENAMEL (LE)
APPROVE MANUFACTURE COLOR TO BE SELECTED FROM THE MANUFACTURERS TOTAL COLOR RANGE. RE: SPECIFICATIONS

SPECIALTIES:

PL-1 & PL-2 COUNTER TOPS
PLASTIC LAMINATE (PL)
APPROVE MANUFACTURE COLOR TO BE SELECTED FROM THE MANUFACTURERS TOTAL STANDARD COLOR RANGE OF SOLIDS AND PATTERNS.
RE: SPECIFICATIONS

WINDOW TREATMENT (WT)
1" ALUMINUM MINI BLIND, APPROVED MANUFACTURE COLOR TO BE SELECTED FROM THE MANUFACTURERS STANDARD COLOR COLOR RANGE.
RE: WINDOW SCHEDULE AND SPECIFICATIONS

CLOSET NOTES
BEDROOM CLOSETS: INSTALL (1) 3/4" PARTICLE BOARD SHELF ON 1 X 2 CLEATS WITH 1X4 CLEAT AT (3) LOCATIONS FOR SHELF BRACKETS. INSTALL ON (3) METAL SHELF BRACKETS PER CLOSET, WITH WOOD DOWEL ROD ON POLE SOCKETS 1 5/16".

FIRST FLOOR CLOSETS: INSTALL (1) 3/4" PARTICLE BOARD SHELF ON 1 X 4 CLEATS WITH WOOD DOWEL ROD ON POLE SOCKETS 1 5/16".

SECOND FLOOR HALL CLOSET: INSTALL (5) 12" X 3/4" PARTICLE BOARD SHELVES ON 1 X 2 CLEATS.

KEYED NOTES:

1. INSTALL STAIR NOSING, "POKERHOLD" SATIN TITANIUM, #LV9T05T112, FOR USE WITH LUXURY VINYL TILE, OR APPROVE EQUAL
2. INSTALL COVING CAP AT SHEET VINYL/TUB ENCLOSURE, CAULK ALONG TUB.
3. WALL BEHIND VANITY CABINET TO BE FINISHED, (PRIMED TEXTURED AND PAINTED) FIRST FLOOR TOILET ROOM ONLY.
4. WALL BEHIND KITCHEN SINK BASE CABINET TO BE FINISHED. (PRIMED TEXTURED AND PAINTED)

ROOM FINISH SCHEDULE BUILDING TYPE E

	RM. NO.	ROOM TITLE	FLOOR SURF.	FLOOR FINISH	BASE MAT.	BASE COL.	A WALL MAT.	A WALL FIN.	A WALL COL.	B WALL MAT.	B WALL FIN.	B WALL COL.	C WALL MAT.	C WALL FIN.	C WALL COL.	D WALL MAT.	D WALL FIN.	D WALL COL.	CEILING MAT.	CEILING FIN.	CEILING COL.	CEILING HGT.	COUNTER TOPS FIN.	COUNTER TOPS COL.	NOTES	RM. NO.
UNIT TYPE "A"	FIRST FLOOR																									
	A101	LIVING/DINING	WOOD	LVT-1	WD	WD-1	GB	LE	LE-1	GB	LE	LE-2	GB	LE	LE-1	GB	LE	LE-1	GB	LE	LE-1	8'0"	-	-		A101
	A102	KITCHEN	WOOD	SV-1	WD	WD-1	GB	LE	LE-1	GB	LE	LE-1	GB	LE	LE-1	GB	LE	LE-1	GB	LE	LE-1	8'0"	PL	PL-2	④ RE:1,2,3 & 6, A5.1E	A102
	A103	BATH	WOOD	SV-1	WD	WD-1	GB	LE	LE-1	GB	LE	LE-1	GB	LE	LE-1	GB	LE	LE-1	GB	LE	LE-1	8'0"	PL	PL-2	③ RE:4, A5.1E	A103
	A104	MECH/LAUNDRY	WOOD	SV-1	WD	WD-1	GB	LE	LE-1	GB	LE	LE-1	GB	LE	LE-1	GB	LE	LE-1	GB	LE	LE-1	8'0"	-	-	RE:5, A5.1E	A104
	A105	BEDROOM	WOOD	LVT-1	WD	WD-1	GB	LE	LE-1	GB	LE	LE-1	GB	LE	LE-1	GB	LE	LE-1	GB	LE	LE-1	8'0"	-	-		A105
	A106	CLOSET	WOOD	LVT-1	WD	WD-1	GB	LE	LE-1	GB	LE	LE-1	GB	LE	LE-1	GB	LE	LE-1	GB	LE	LE-1	8'0"	-	-		A106
		OPEN	-	-	-	-	-	-	-	-	-	-	-	-	-	-	-	-	-	-	-	-	-	-		
	RM. NO.	ROOM TITLE	FLOOR SURF.	FLOOR FINISH	BASE MAT.	BASE COL.	A WALL MAT.	A WALL FIN.	A WALL COL.	B WALL MAT.	B WALL FIN.	B WALL COL.	C WALL MAT.	C WALL FIN.	C WALL COL.	D WALL MAT.	D WALL FIN.	D WALL COL.	CEILING MAT.	CEILING FIN.	CEILING COL.	CEILING HGT.	COUNTER TOPS FIN.	COUNTER TOPS COL.	NOTES	RM. NO.
UNIT TYPE "B"	FIRST FLOOR																									
	B101	LIVING/DINING	WOOD	LVT-1	WD	WD-1	GB	LE	LE-1	GB	LE	LE-2	GB	LE	LE-1	GB	LE	LE-1	GB	LE	LE-1	8'0"	-	-		B101
	B102	KITCHEN	WOOD	SV-1	WD	WD-1	GB	LE	LE-1	GB	LE	LE-1	GB	LE	LE-1	GB	LE	LE-1	GB	LE	LE-1	8'0"	PL	PL-1	④ RE:7,8,9 & 26, A5.1E	B102
	B103	TOILET	WOOD	SV-1	WD	WD-1	GB	LE	LE-1	GB	LE	LE-1	GB	LE	LE-1	GB	LE	LE-1	GB	LE	LE-1	8'0"	PL	PL-1	③ RE:10, A5.1E	B103
	B104	MECHANICAL	WOOD	SV-1	WD	WD-1	GB	LE	LE-1	GB	LE	LE-1	GB	LE	LE-1	GB	LE	LE-1	GB	LE	LE-1	8'0"	-	-		B104
	B105	CLOSET	WOOD	LVT-1	WD	WD-1	GB	LE	LE-1	GB	LE	LE-1	GB	LE	LE-1	GB	LE	LE-1	GB	LE	LE-1	8'0"	-	-		B105
	B106	STAIR	WOOD	LVT-1	WD	WD-1	GB	LE	LE-1	GB	LE	LE-1	GB	LE	LE-1	GB	LE	LE-1	GB	LE	LE-1	VARIES	-	-	①	B106
		OPEN	-	-	-	-	-	-	-	-	-	-	-	-	-	-	-	-	-	-	-	-	-	-		
		SECOND FLOOR																								
	B201	HALL	WOOD	LVT-1	WD	WD-1	GB	LE	LE-1	GB	LE	LE-1	GB	LE	LE-1	GB	LE	LE-1	GB	LE	LE-1	8'0"	-	-		B201
	B202	BATH	WOOD	SV-1	WD	WD-1	GB	LE	LE-1	GB	LE	LE-1	GB	LE	LE-1	GB	LE	LE-1	GB	LE	LE-1	8'0"	PL	PL-1	② RE:11,12 A5.1E	B202
	B203	LAUNDRY	WOOD	SV-1	WD	WD-1	GB	LE	LE-1	GB	LE	LE-1	GB	LE	LE-1	GB	LE	LE-1	GB	LE	LE-1	8'0"	-	-	RE:13, A5.1E	B203
	B204	BEDROOM	WOOD	LVT-1	WD	WD-1	GB	LE	LE-1	GB	LE	LE-1	GB	LE	LE-1	GB	LE	LE-1	GB	LE	LE-1	8'0"	-	-		B204
	B205	CLOSET	WOOD	LVT-1	WD	WD-1	GB	LE	LE-1	GB	LE	LE-1	GB	LE	LE-1	GB	LE	LE-1	GB	LE	LE-1	8'0"	-	-		B205
	B206	BEDROOM	WOOD	LVT-1	WD	WD-1	GB	LE	LE-1	GB	LE	LE-1	GB	LE	LE-1	GB	LE	LE-1	GB	LE	LE-1	8'0"	-	-		B206
	B207	CLOSET	WOOD	LVT-1	WD	WD-1	GB	LE	LE-1	GB	LE	LE-1	GB	LE	LE-1	GB	LE	LE-1	GB	LE	LE-1	8'0"	-	-		B207
		OPEN	-	-	-	-	-	-	-	-	-	-	-	-	-	-	-	-	-	-	-	-	-	-		
	RM. NO.	ROOM TITLE	FLOOR SURF.	FLOOR FINISH	BASE MAT.	BASE COL.	A WALL MAT.	A WALL FIN.	A WALL COL.	B WALL MAT.	B WALL FIN.	B WALL COL.	C WALL MAT.	C WALL FIN.	C WALL COL.	D WALL MAT.	D WALL FIN.	D WALL COL.	CEILING MAT.	CEILING FIN.	CEILING COL.	CEILING HGT.	COUNTER TOPS FIN.	COUNTER TOPS COL.	NOTES	RM. NO.
UNIT TYPE "C"	FIRST FLOOR																									
	C101	LIVING/DINING	WOOD	LVT-1	WD	WD-1	GB	LE	LE-1	GB	LE	LE-1	GB	LE	LE-1	GB	LE	LE-2	GB	LE	LE-1	8'0"	-	-		C101
	C102	KITCHEN	WOOD	SV-1	WD	WD-1	GB	LE	LE-1	GB	LE	LE-1	GB	LE	LE-1	GB	LE	LE-1	GB	LE	LE-1	8'0"	PL	PL-1	④ RE:14,15,16 & 26, A5.1E	C102
	C103	TOILET	WOOD	SV-1	WD	WD-1	GB	LE	LE-1	GB	LE	LE-1	GB	LE	LE-1	GB	LE	LE-1	GB	LE	LE-1	8'0"	PL	PL-1	③ RE:17, A5.1E	C103
	C104	MECHANICAL	WOOD	SV-1	WD	WD-1	GB	LE	LE-1	GB	LE	LE-1	GB	LE	LE-1	GB	LE	LE-1	GB	LE	LE-1	8'0"	-	-		C104
	C105	CLOSET	WOOD	LVT-1	WD	WD-1	GB	LE	LE-1	GB	LE	LE-1	GB	LE	LE-1	GB	LE	LE-1	GB	LE	LE-1	8'0"	-	-		C105
	C106	STAIR	WOOD	LVT-1	WD	WD-1	GB	LE	LE-1	GB	LE	LE-1	GB	LE	LE-1	GB	LE	LE-1	GB	LE	LE-1	VARIES	-	-	①	C106
		OPEN	-	-	-	-	-	-	-	-	-	-	-	-	-	-	-	-	-	-	-	-	-	-		
		SECOND FLOOR																								
	C201	HALL	WOOD	LVT-1	WD	WD-1	GB	LE	LE-1	GB	LE	LE-1	GB	LE	LE-1	GB	LE	LE-1	GB	LE	LE-1	8'0"	-	-		C201
	C202	BATH	WOOD	SV-1	WD	WD-1	GB	LE	LE-1	GB	LE	LE-1	GB	LE	LE-1	GB	LE	LE-1	GB	LE	LE-1	8'0"	PL	PL-1	② RE:18,19, A5.1E	C202
	C203	LAUNDRY	WOOD	SV-1	WD	WD-1	GB	LE	LE-1	GB	LE	LE-1	GB	LE	LE-1	GB	LE	LE-1	GB	LE	LE-1	8'0"	-	-	RE:20, A5.1E	C203
	C204	BEDROOM	WOOD	LVT-1	WD	WD-1	GB	LE	LE-1	GB	LE	LE-1	GB	LE	LE-1	GB	LE	LE-1	GB	LE	LE-1	8'0"	-	-		C204
	C205	CLOSET	WOOD	LVT-1	WD	WD-1	GB	LE	LE-1	GB	LE	LE-1	GB	LE	LE-1	GB	LE	LE-1	GB	LE	LE-1	8'0"	-	-		C205
	C206	BEDROOM	WOOD	LVT-1	WD	WD-1	GB	LE	LE-1	GB	LE	LE-1	GB	LE	LE-1	GB	LE	LE-1	GB	LE	LE-1	8'0"	-	-		C206
	C207	CLOSET	WOOD	LVT-1	WD	WD-1	GB	LE	LE-1	GB	LE	LE-1	GB	LE	LE-1	GB	LE	LE-1	GB	LE	LE-1	8'0"	-	-		C207
		OPEN	-	-	-	-	-	-	-	-	-	-	-	-	-	-	-	-	-	-	-	-	-	-		
	RM. NO.	ROOM TITLE	FLOOR SURF.	FLOOR FINISH	BASE MAT.	BASE COL.	A WALL MAT.	A WALL FIN.	A WALL COL.	B WALL MAT.	B WALL FIN.	B WALL COL.	C WALL MAT.	C WALL FIN.	C WALL COL.	D WALL MAT.	D WALL FIN.	D WALL COL.	CEILING MAT.	CEILING FIN.	CEILING COL.	CEILING HGT.	COUNTER TOPS FIN.	COUNTER TOPS COL.	NOTES	RM. NO.
UNIT TYPE "D"	FIRST FLOOR																									
	D101	LIVING/DINING	WOOD	LVT-1	WD	WD-1	GB	LE	LE-1	GB	LE	LE-1	GB	LE	LE-1	GB	LE	LE-2	GB	LE	LE-1	8'0"	-	-		D101
	D102	KITCHEN	WOOD	SV-1	WD	WD-1	GB	LE	LE-1	GB	LE	LE-1	GB	LE	LE-1	GB	LE	LE-1	GB	LE	LE-1	8'0"	PL	PL-2	④ RE:21,22,23 & 6 A5.1E	D102
	D103	BATH	WOOD	SV-1	WD	WD-1	GB	LE	LE-1	GB	LE	LE-1	GB	LE	LE-1	GB	LE	LE-1	GB	LE	LE-1	8'0"	PL	PL-2	③ RE:24, A5.1E	D103
	D104	MECH/LAUNDRY	WOOD	SV-1	WD	WD-1	GB	LE	LE-1	GB	LE	LE-1	GB	LE	LE-1	GB	LE	LE-1	GB	LE	LE-1	8'0"	-	-	RE:25, A5.1E	D104
	D105	BEDROOM	WOOD	LVT-1	WD	WD-1	GB	LE	LE-1	GB	LE	LE-1	GB	LE	LE-1	GB	LE	LE-1	GB	LE	LE-1	8'0"	-	-		D105
	D106	CLOSET	WOOD	LVT-1	WD	WD-1	GB	LE	LE-1	GB	LE	LE-1	GB	LE	LE-1	GB	LE	LE-1	GB	LE	LE-1	8'0"	-	-		D106
		OPEN	-	-	-	-	-	-	-	-	-	-	-	-	-	-	-	-	-	-	-	-	-	-		
	RM. NO.	ROOM TITLE	FLOOR SURF.	FLOOR FINISH	BASE MAT.	BASE COL.	A WALL MAT.	A WALL FIN.	A WALL COL.	B WALL MAT.	B WALL FIN.	B WALL COL.	C WALL MAT.	C WALL FIN.	C WALL COL.	D WALL MAT.	D WALL FIN.	D WALL COL.	CEILING MAT.	CEILING FIN.	CEILING COL.	CEILING HGT.	TOPS FIN.	TOPS COL.	NOTES	RM. NO.
		BUILDING EXTERIOR ROOMS, WATER ENTRY AND STORAGE ROOM																								
	E101	WATER ENTRY	CONC	SLR	RB	RB-1	GB	LE	LE-1	GB	LE	LE-1	GB	LE	LE-1	GB	LE	LE-1	GB	LE	LE-1	8'0"	-	-		E101

GENERAL NOTES:

FIELD VERIFY ALL DIMENSIONS.

INSTALL BLOCKING IN WALLS FOR ALL CABINETS, SHELVING AND UNDER COUNTER BRACKETS.

CABINET BLOCKING: KITCHEN LAUNDRY, BATH & TOILET ROOMS
INSTALL LADDER BLOCKING IN ALL KITCHEN WALLS WHERE CABINETS WILL BE MOUNTED. HEIGHT OF BLOCKS ARE DETERMINED BY THE SIZE AND STYLE OF CABINET TO BE MOUNTED. INSTALL BLOCKING AT THE TOP OF ALL BASE CABINETS KITCHENVANITY, AND AT THE TOP AND BOTTOM OF ALL WALL CABINETS.
TYPICAL HEIGHTS, TOP-T, BOTTOM OF UPPER CABINET 4'-8" TOP OF BASE CABINET 2'-9".

INSTALL BLOCKING IN WALLS FOR ALL GRAB BARS, TOWEL BARS AND TOILET PAPER HOLDERS.
TOILET PAPER HANGERS INSTALLED ON CABINETS TO HAVE BLOCKING SET INSIDE CABINET.

- TOWEL BARS TO BE INSTALLED AT 42" A.F.F. (1) IN TOILET ROOM, (2) IN BATH ROOM.
- TOILET PAPER DISPENSERS AT 24" A.F.F.
- TOILET GRAB BARS 34" A.F.F. (FIRST FLOOR TOILET ROOM ONLY)
- HANDRAIL BLOCKING CENTERED AT 32" ABOVE NOSING.
- CLOSET CENTER SHELF BLOCKING, 5' A.F.F. MEASUREMENTS TO THE BLOCKING ARE TO THE CENTER OF TYPICAL 2X4 AND 2X6 BLOCKING.

ALL CABINETS TO RECEIVE PLASTIC LAMINATE COUNTERTOPS WITH 4" BACK, END AND SIDE SPLASH. RE: SPECIFICATIONS

ALL CABINETS TO HAVE FINISHED TOE KICKS, FINISHED EXPOSED END PANELS AND FILLER AS CALLED FOR ON ELEVATIONS. TYPICAL FILLER 1 1/2" TO 3".

BLIND CORNER CABINETS TO HAVE INTERIOR PANEL AT OPENING.

WASHER, DRYER, RANGE AND REFRIGERATOR NOT IN CONTRACT (N.I.C.).

DISHWASHER SUPPLIED AND INSTALLED BY CONTRACTOR. RE: PLUMBING FIXTURE SCHEDULE.

UNIT TYPE C

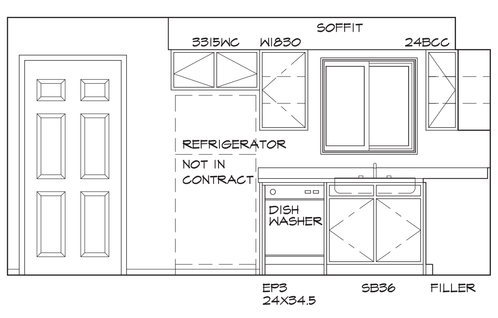

14 KITCHEN ELEVATION A
SCALE 3/8" = 1'-0" C102

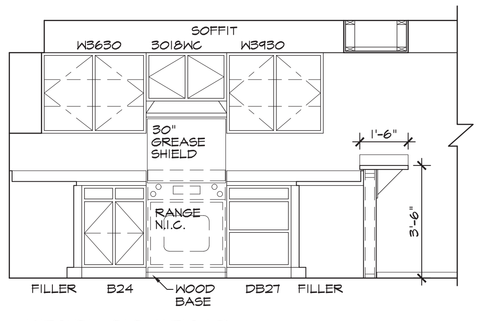

15 KITCHEN ELEVATION B
SCALE 3/8" = 1'-0" C102

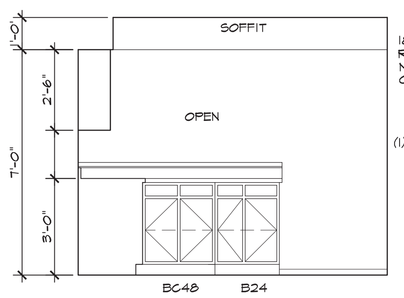

16 KITCHEN ELEVATION C
SCALE 3/8" = 1'-0" C102

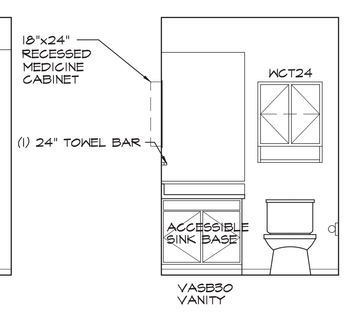

17 TOILET ELEVATION C
SCALE 3/8" = 1'-0" C103

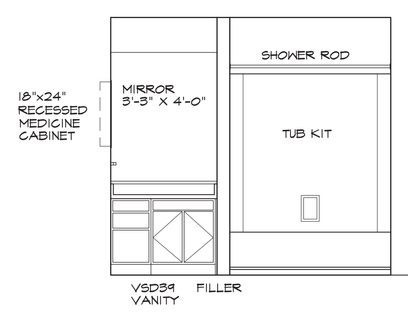

18 BATH ELEVATION D
SCALE 3/8" = 1'-0" C202

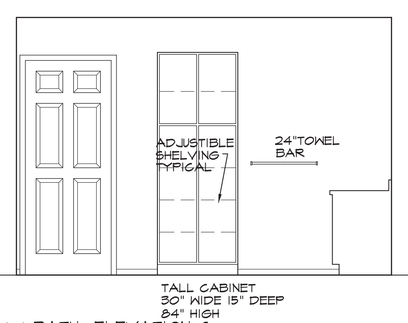

19 BATH ELEVATION C
SCALE 3/8" = 1'-0" C202

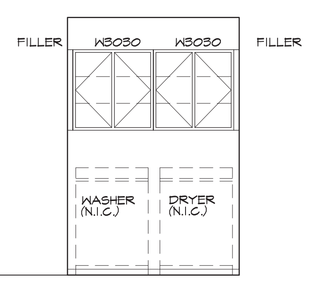

20 LAUNDRY ELEVATION D
SCALE 3/8" = 1'-0" C203

UNIT TYPE D

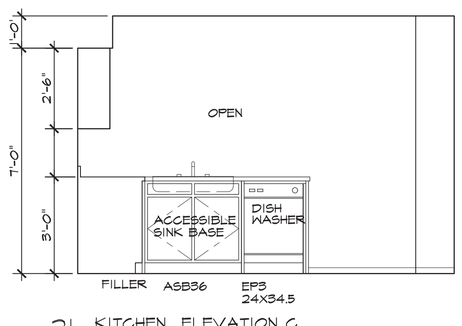

21 KITCHEN ELEVATION C
SCALE 3/8" = 1'-0" D102

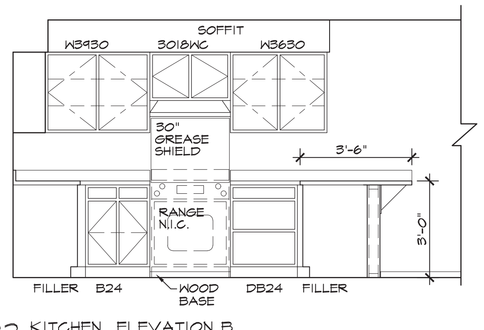

22 KITCHEN ELEVATION B
SCALE 3/8" = 1'-0" D102

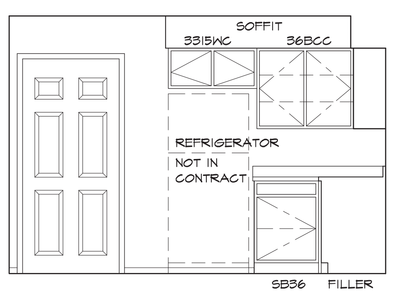

23 KITCHEN ELEVATION A
SCALE 3/8" = 1'-0" D102

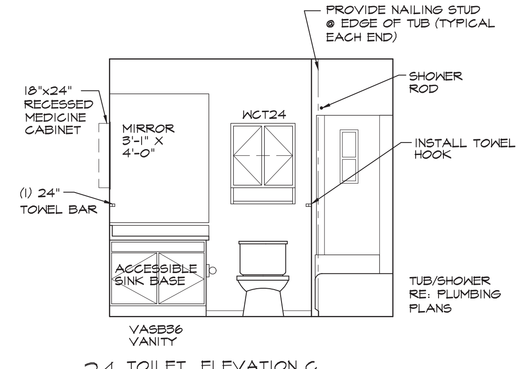

24 TOILET ELEVATION C
SCALE 3/8" = 1'-0" D103

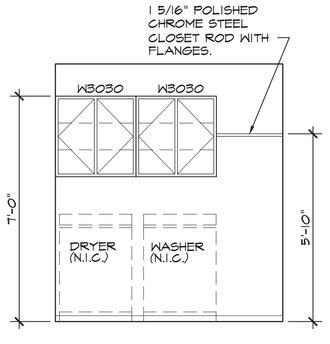

25 MECH/LAUNDRY ELEVATION B
SCALE 3/8" = 1'-0" D203

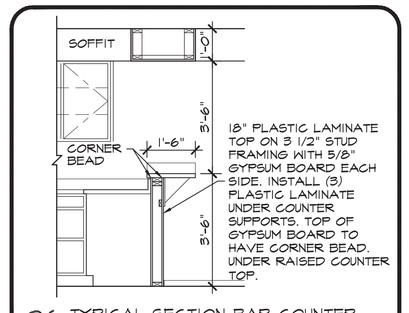

26 TYPICAL SECTION BAR COUNTER
SCALE 3/8" = 1'-0"

HIGLE ARCHITECTS

UPLANDS TOWNHOMES
DEVELOPED BY THE HOUSING AUTHORITY OF PUEBLO
PROJECT No.: I.F.B. 17-524-RAD
ACERO AVE. and SPRAGUE AVE., PUEBLO, COLORADO 81004

DATE 3-29-17
DRAWN JC
CHECK XXX
REVISIONS:

SHEET A5.1E

PAD FOOTING SCHEDULE		
MARK	SIZE	REINFORCEMENT
A	2'-6" x 2'-6" x 1'-0"	(3) # 5 EACH WAY
B	2'-0" x 2'-0" x 1'-0"	(3) # 4 EACH WAY

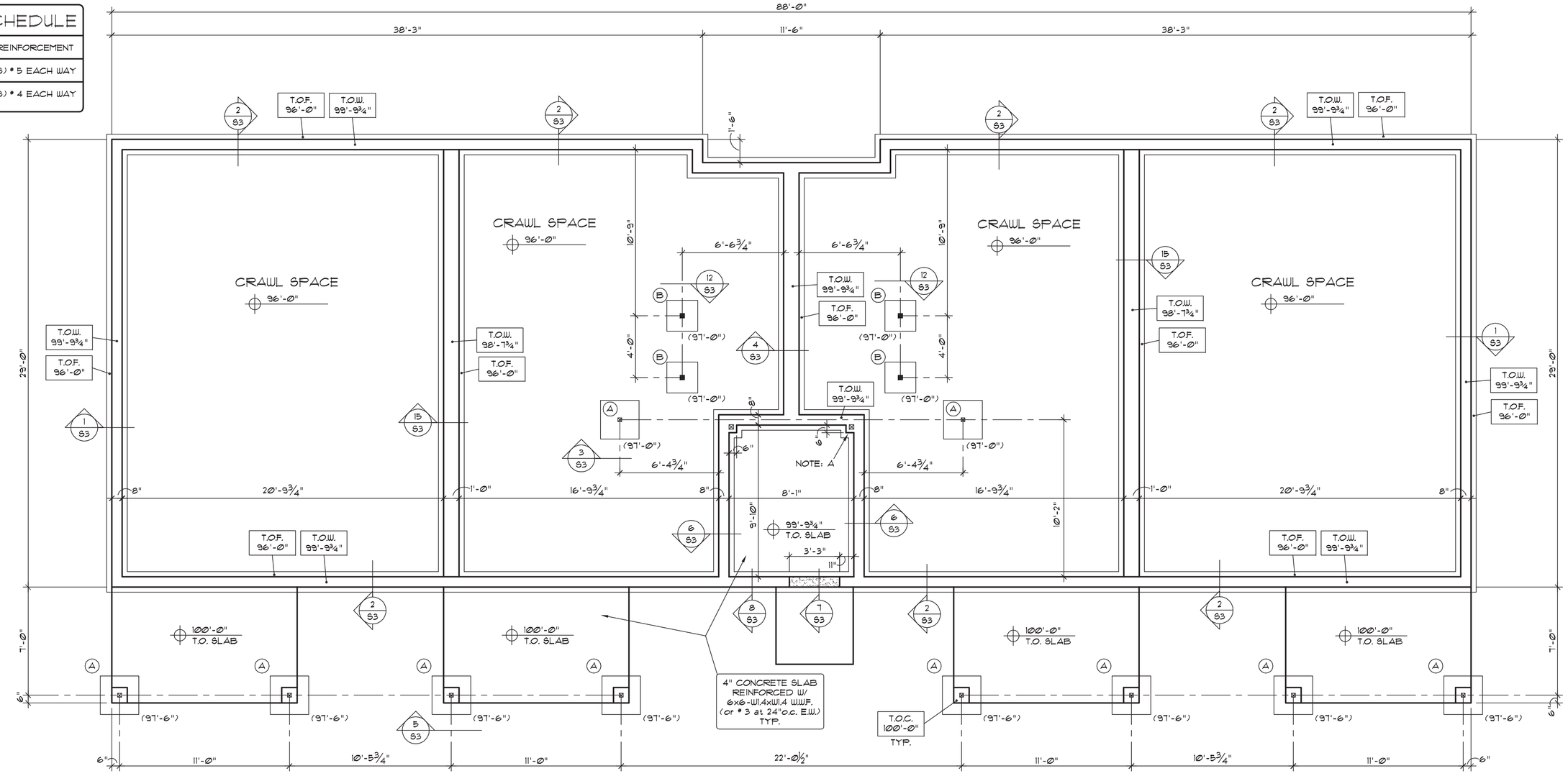

FOUNDATION PLAN

SCALE: 1/4"=1'-0"

NOTES: A) SIMPSON ABA44Z - ANCHOR WITH ½"ø EXP. BOLT (2 LOCATIONS)

FLOOR DECK

¾" T & G APA RATED STURD-I-FLOOR, EXTERIOR, IDENTIFICATION No. 24, GLUE AND NAIL W/ 8d NAILS at 6"o.c. AT PANEL EDGES AND 10"o.c. IN FIELD. (O.S.B. IS ACCEPTABLE)

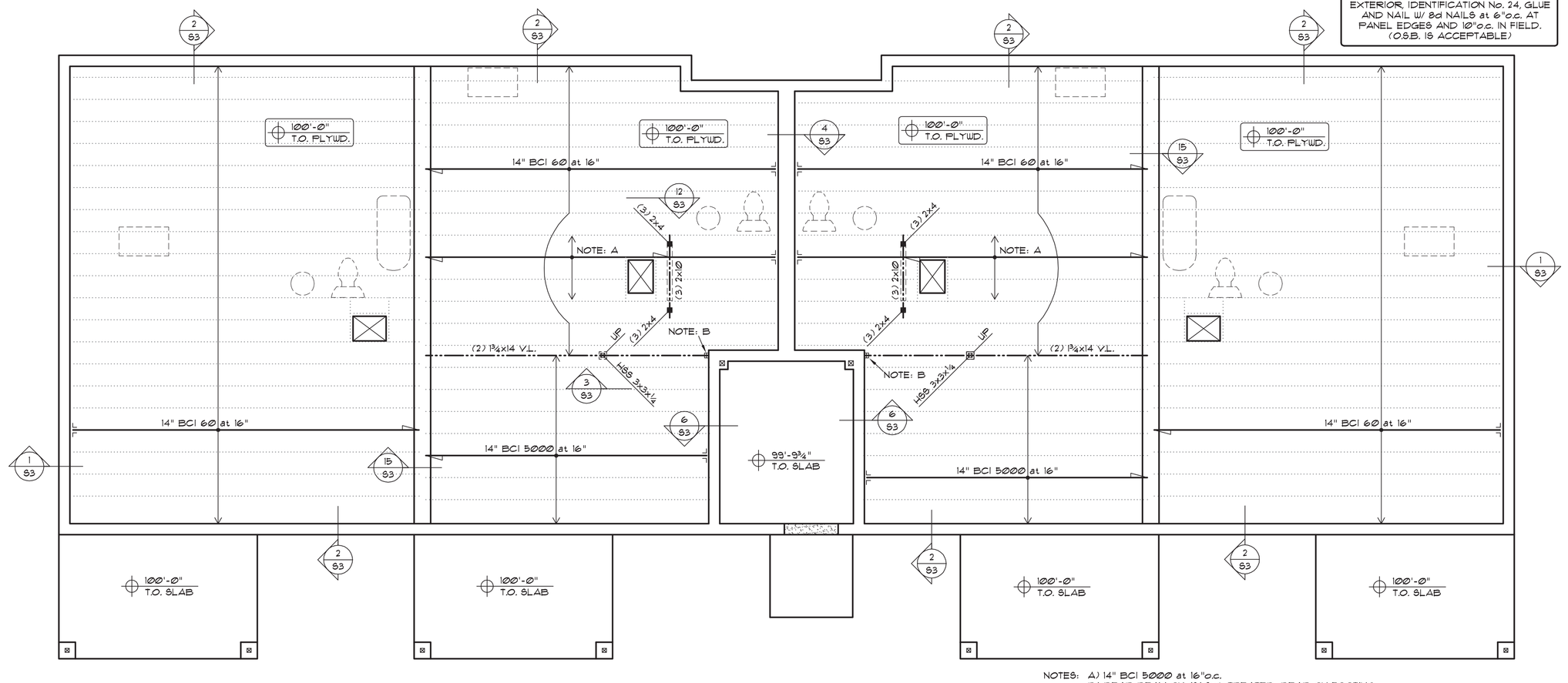

NOTES: A) 14" BCI 5000 at 16"o.c.
B) BEAR BEAM ON (2) 2x6 TREATED, BEAR ON FOOTING AND ATTACH TO WALL W/ POWER DRIVEN FASTENERS.

MAIN FLOOR FRAMING PLAN

SCALE: 1/4"=1'-0"

IHGF ARCHITECTS

HOUSING AUTHORITY CITY OF PUEBLO

UPLANDS TOWNHOMES

DEVELOPED BY THE HOUSING AUTHORITY OF PUEBLO

PROJECT No.: I.F.B. 17-624-PAD

ACERO AVE. and SPRAGUE AVE., PUEBLO, COLORADO 81004

PROJECT 17.013

DATE 03-29-2017

DRAWN JRV

CHECK JRV

REVISIONS:

SHEET S1E

FLOOR DECK
¾" T & G APA RATED STURD-I-FLOOR, EXTERIOR, IDENTIFICATION No. 24, GLUE AND NAIL W/ 8d NAILS at 6"o.c. AT PANEL EDGES AND 12"o.c. IN FIELD. (O.S.B. IS ACCEPTABLE)

ROOF DECK
7/16" APA RATED SHEATHING, EXPOSURE 1, IDENTIFICATION No. 24/16, NAIL W/ 8d NAILS at 6"o.c. AT PANEL EDGES AND 12"o.c. IN FIELD.

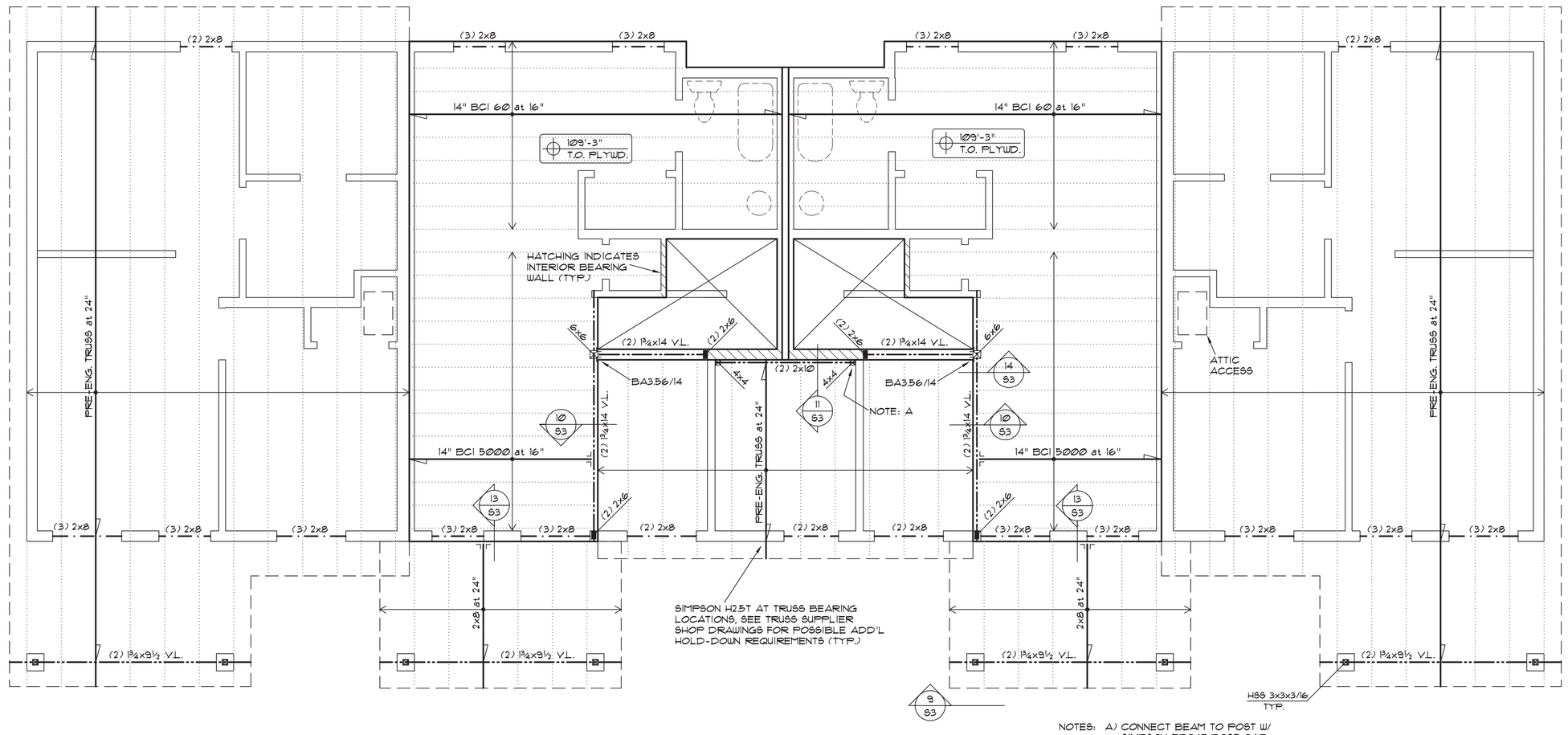

NOTES: A) CONNECT BEAM TO POST W/ SIMPSON EPC4Z POST CAP, SHIM BEAM AS NEEDED (TYP.)

UPPER FLOOR / LOW ROOF FRAMING PLAN

SCALE: 1/4"=1'-0"

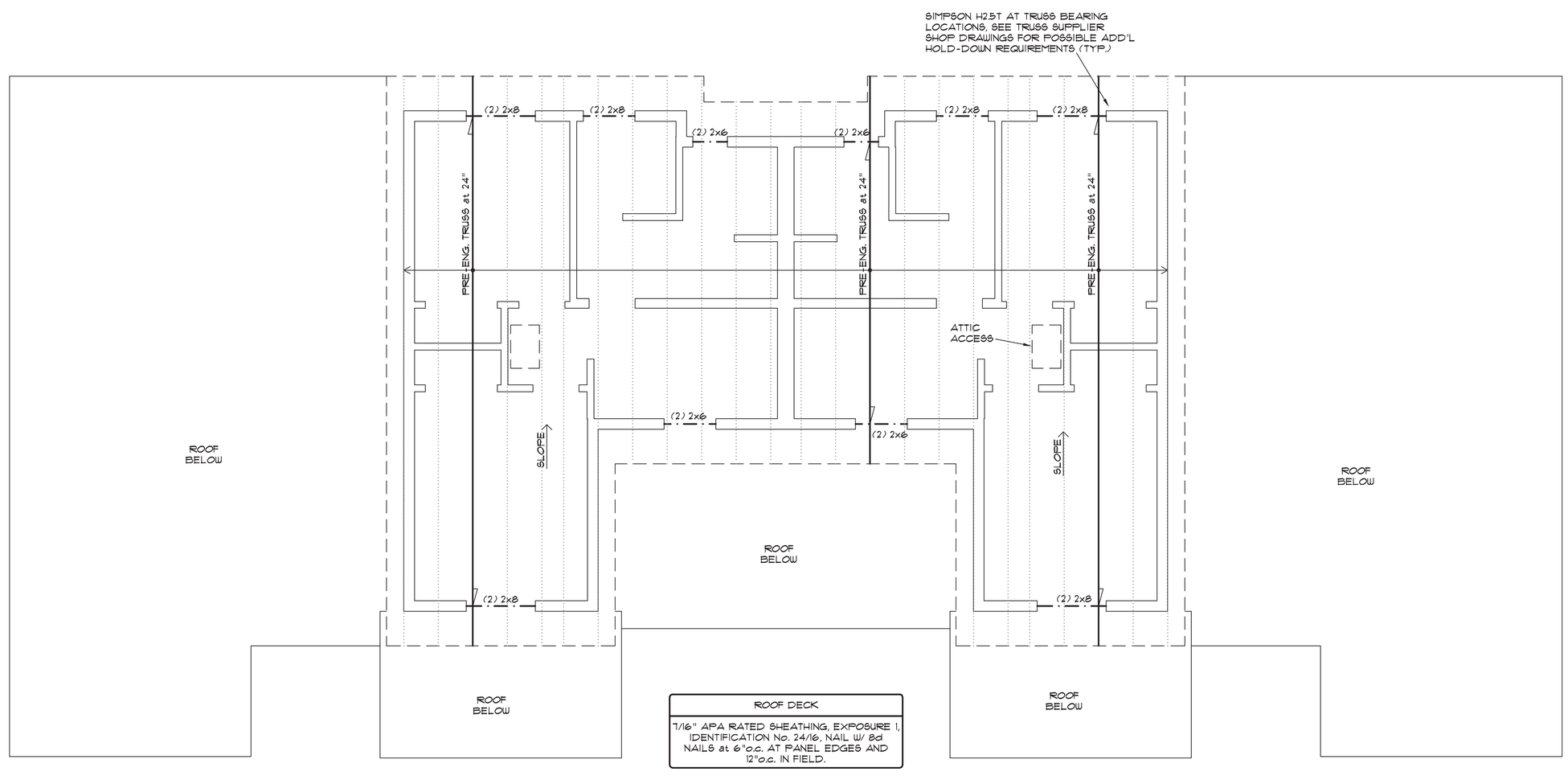

ROOF DECK
7/16" APA RATED SHEATHING, EXPOSURE 1, IDENTIFICATION No. 24/16, NAIL W/ 8d NAILS at 6"o.c. AT PANEL EDGES AND 12"o.c. IN FIELD.

HIGH ROOF FRAMING PLAN

SCALE: 1/4"=1'-0"

HGF ARCHITECTS

HOUSING AUTHORITY CITY OF PUEBLO

UPLANDS TOWNHOMES

DEVELOPED BY THE HOUSING AUTHORITY OF PUEBLO

PROJECT No.: I.F.B. 17-624-RAD

ACERO AVE. and SPRAGUE AVE., PUEBLO, COLORADO 81004

PROJECT 17013

DATE 03-29-2017

DRAWN JRV

CHECK JRV

REVISIONS:

SHEET S2E

GENERAL NOTES

1. This project is designed in accordance with the International Building Code (IBC) 2015 Edition.
2. Dead Loads:
   A. Floor . . . . . 15 psf
   B. Roof . . . . . 15 psf (20 psf at trusses)
3. Live Loads:
   A. Roof (snow) . . . . . 30 psf
   B. Floors . . . . . 40 psf
   C. Wind . . . . . 115 mph, Exposure 'C'
4. Foundation:
   A. The structure shall be founded on spread footings placed on at least 24 inches of structural fill with a maximum bearing pressure of 3,000 psf.
   B. Minimum frost depth of footings shall be 30" (top of grade to bottom of footing). Field verify all top of footing elevations.
   C. Refer to soil report # SC03229-125, dated June 1, 2016 (prepared by CTL Thompson) for additional information.
5. Concrete:
   A. Concrete has been designed and shall be constructed in accordance with the American Concrete Institute "Building Code Requirements for Structural Concrete" (ACI 318). All concrete shall be of stone aggregate, unless noted otherwise.
   Minimum 28 day compressive strength shall be:
   (1) Foundation concrete shall be made with cement that meets ASTM C150 Type II, 20% fly ash (ASTM C618 Class F), maximum water-cement ratio of 0.40, total air content of 6 percent +/- 1.5 percent, and a minimum 28 day compressive strength of 4,000 psi. Fly ash content can be reduced to 15% for placement in cold weather provided water-cement ratio of 0.40 is maintained.
   (2) Slabs: . . . . . 4000 psi
   (3) All other concrete: . . . . . 3000 psi
   B. Reinforcing shall be new billet steel ASTM A615, grade 60, except stirrups, ties and bars to be welded shall be grade 40. Provide corner bars to match all horizontal reinforcing. Provide (2) # 5 around all openings in concrete and extend bars 24" past edges of openings.
   C. Lap Splices shall be Class B. Use the following lap lengths, U.N.O.:
   (1) No. 6 bars and smaller:
   a. 57 bar diameters for 3,000 psi concrete.
   b. 50 bar diameters for 4,000 psi concrete.
   D. Reinforcing placement: Provide chairs, standees, additional reinforcement, and accessories necessary to support reinforcement at position shown. Support of reinforcement on form ties, brick, or other unacceptable material will not be allowed.
   E. Minimum concrete cover:
   (1) Concrete cast against and permanently exposed to earth . . . . . 3 inches
   (2) Concrete exposed to earth or weather:
   a. # 6 bar and larger . . . . . 2 inches
   b. # 5 bar and smaller . . . . . 1.5 inches
   (3) Concrete not exposed to earth or weather . . . 3/4 inches
   F. Anchor rods (Anchor bolts) shall be grade 36, conforming to ASTM F1554, and shall have a minimum concrete embedment of 7" with a 2" hook, unless noted otherwise.
   G. Exterior slabs/sidewalks shall be 4" thick (minimum) reinforced with 6x6-W1.4xW1.4 w.w.f.
6. Steel:
   A. Structural steel shall be detailed and erected in accordance with the American Institute of Steel Construction Specifications and Code of Standard Practice. Minimum yield strength:
   50 ksi for square/rectangular HSS (ASTM A500, GR. C)
   36 ksi for all other members (ASTM A36)
   B. Connections:
   (1) Use standard framed beam connections meeting the requirements of the "Manual of Steel Construction-ASD", latest edition. Use 3/4" diameter, A325-N bolts, minimum, snug-tightened; or ASTM F1852 tension-control (TC) bolts.
   (2) Minimum welds per AISC Specification and AWS D1.1, not less than continuous 3/16" fillet, E70XX electrodes, unless noted otherwise. Welding of reinforcing to embeds shall be done to develop 1.5 times the yield strength of the reinforcing.
   C. Column base plates that require grout shall bear on non-shrink grout.
7. Wood:
   A. Framing lumber shall be (U.N.O.):
   (1) Studs . . . . . Hem-fir Stud grade
   (2) Headers . . . . . Hem-fir # 2
   (3) Joists/Rafters . . . . . Hem-fir # 2
   B. Wood construction shall be in conformance with the "National Design Specification for Stress Grade Lumber and its Fastenings."
   C. Stainless steel (or galvanized) connectors, fasteners and anchors shall be used with preservative-treated woods.
   D. Exterior walls shall be fully sheathed with 7/16" oriented strand board (O.S.B.), or approved equivalent.
   E. Plywood web joists and Versa-lam LVL (2.0E - noted V.L. on plans) shall be manufactured by Boise Cascade, or approved equivalent. Joists and beams shall not be modified without the written consent of the Structural Engineer.
   F. Locate floor joists so that they do not interfere with plumbing.
   G. Roof trusses shall be designed by a registered professional engineer (Colorado). Live load deflections shall not exceed 1/240 of the span. Calculations and shop drawings bearing the seal and signature of the design engineer shall be reviewed by the Structural Engineer prior to truss fabrication. Shop drawings shall show location of all trusses, connection plate capacity, and the size and grade of lumber used. Truss manufacturer shall provide blocking and bridging as required for stability, and bearing blocks if needed. Truss supplier shall provide all hangers and connectors needed. Trusses to be designed for future solar panels, verify locations and weights with Owner.
8. Drawing Coordination:
   A. Dimensions on these Structural drawings shall be verified with the Architectural drawings and any discrepancy shall be brought to the Architect's attention.
   B. DRAWINGS SHALL NOT BE SCALED. Written dimensions shall take precedence over scaled measurements.
   C. Shop drawings shall be prepared and drawn by the fabricator. Copying these drawings for shop drawing use will not be permitted.
   D. Any and all material substitutions shall be approved by the Structural Engineer prior to construction.

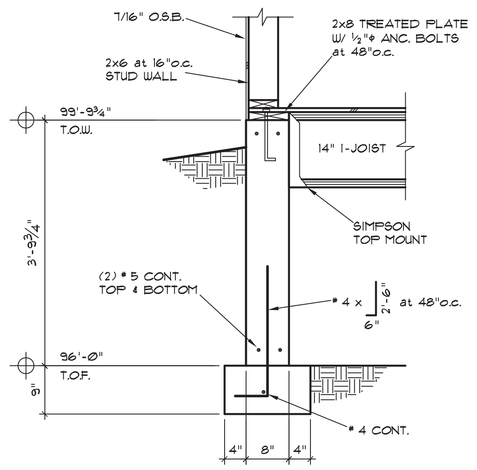

1 SCALE: 3/4"=1'-Ø"

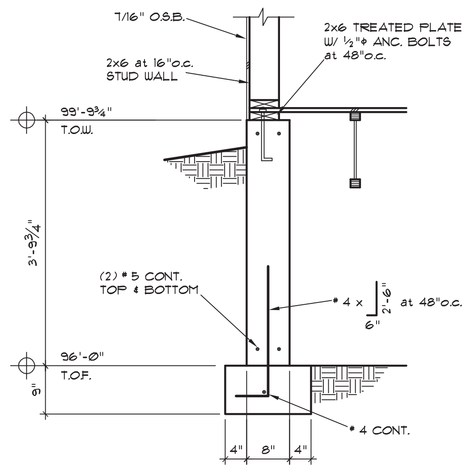

2 SCALE: 3/4"=1'-Ø"

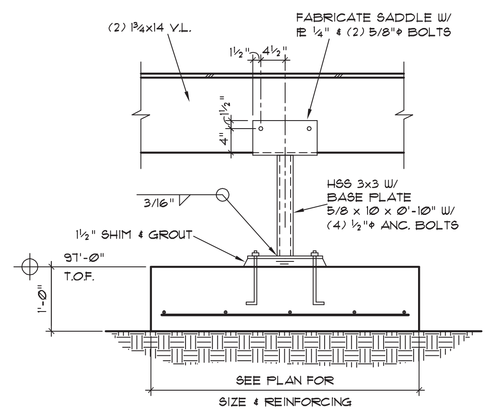

3 SCALE: 3/4"=1'-Ø"

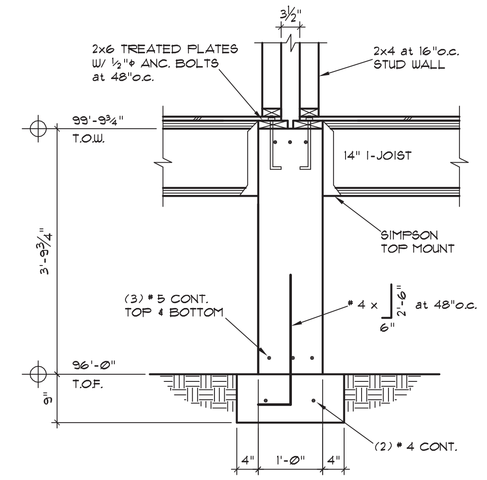

4 SCALE: 3/4"=1'-Ø"

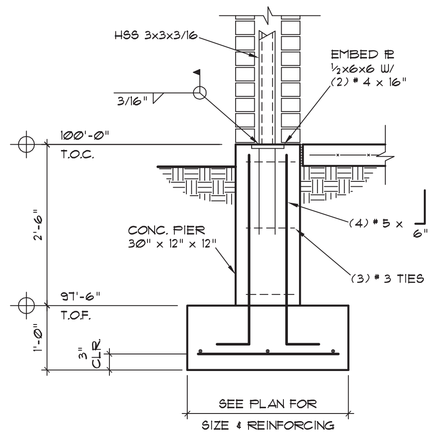

5 SCALE: 3/4"=1'-Ø"

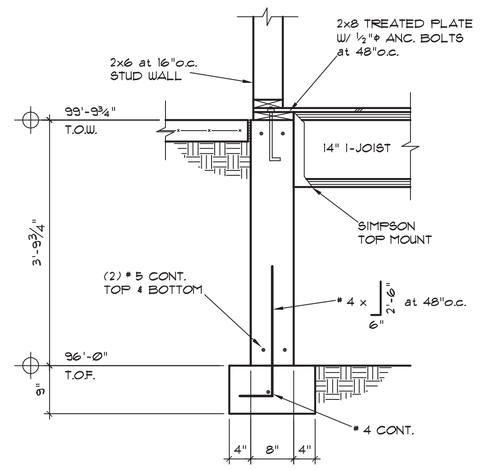

6 SCALE: 3/4"=1'-Ø"

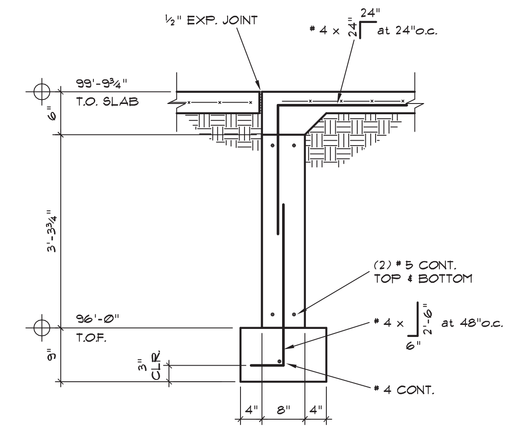

7 SCALE: 3/4"=1'-Ø"

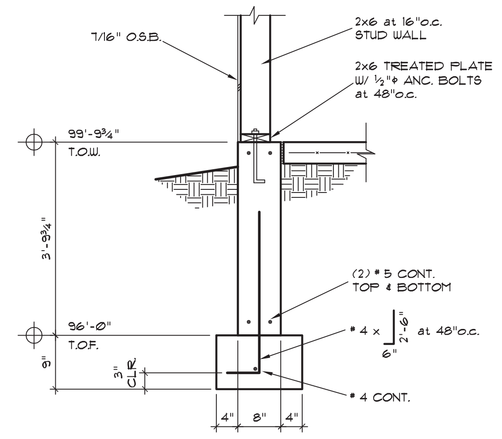

8 SCALE: 3/4"=1'-Ø"

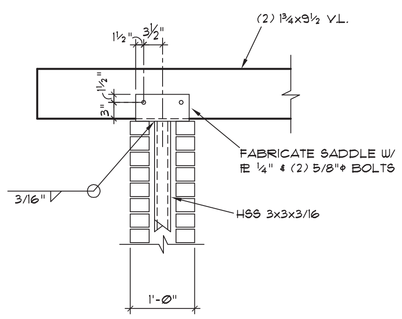

9 SCALE: 3/4"=1'-Ø"

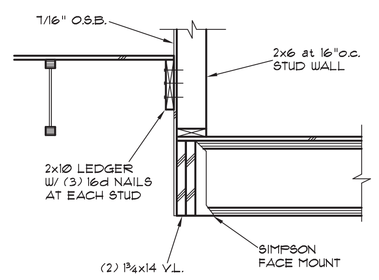

10 SCALE: 3/4"=1'-Ø"

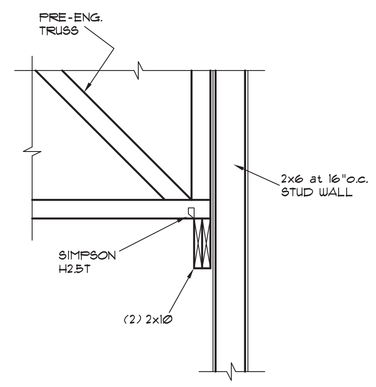

11 SCALE: 3/4"=1'-Ø"

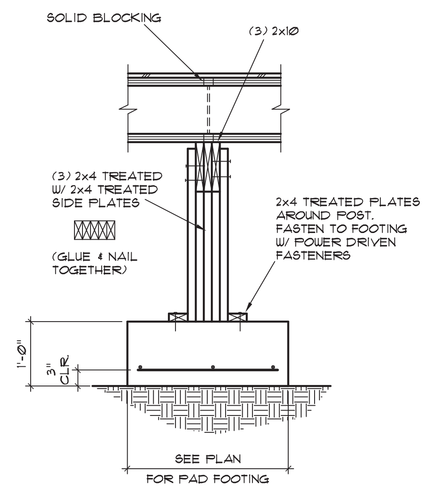

12 SCALE: 3/4"=1'-Ø"

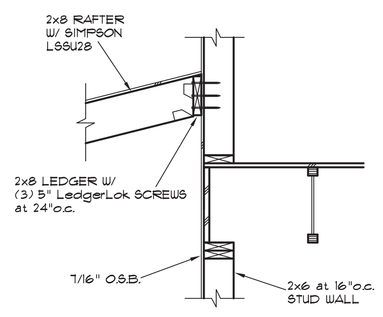

13 SCALE: 3/4"=1'-Ø"

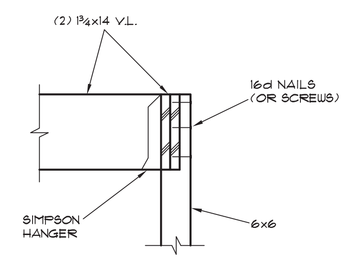

14 SCALE: 3/4"=1'-Ø"

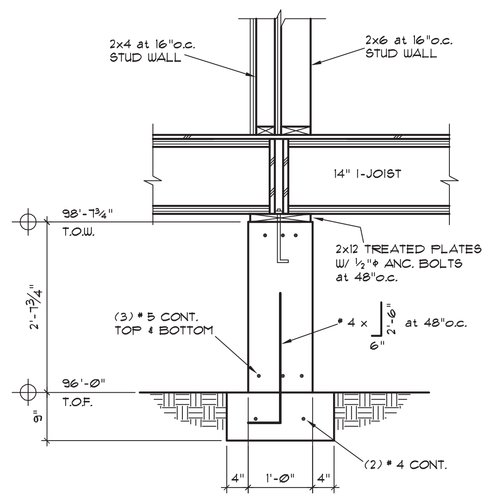

15 SCALE: 3/4"=1'-Ø"

IHGF ARCHITECTS

HOUSING AUTHORITY CITY OF PUEBLO

UPLANDS TOWNHOMES

DEVELOPED BY THE HOUSING AUTHORITY OF PUEBLO

PROJECT No.: I.F.B. 17-524-RAD

ACERO AVE. and SPRAGUE AVE., PUEBLO, COLORADO 81004

PROJECT 17.Ø13

DATE Ø3-29-2017

DRAWN JRV

CHECK JRV

REVISIONS:

SHEET S3E

UPLANDS TOWNHOMES

DEVELOPED BY THE HOUSING AUTHORITY OF PUEBLO

PROJECT No: I.F.B. 17-524-RAD

ACERO AVE. and SPRAGUE AVE., PUEBLO, COLORADO 81004

HGF ARCHITECTS

HOUSING AUTHORITY OF THE CITY OF PUEBLO

AE Associates, Inc.
Engineering Successful Building Environments
308 West Fillmore Street, Suite 200
Colorado Springs, Colorado 80907
(719) 282-9430
FAX (719) 282-9614

DATE 03/29/2017
DRAWN CAD
CHECK RDL
REVISIONS:

SHEET M0.1E

COLORADO REGISTERED PROFESSIONAL ENGINEER
ROGER D. LEMMON
32686
03/29/2017

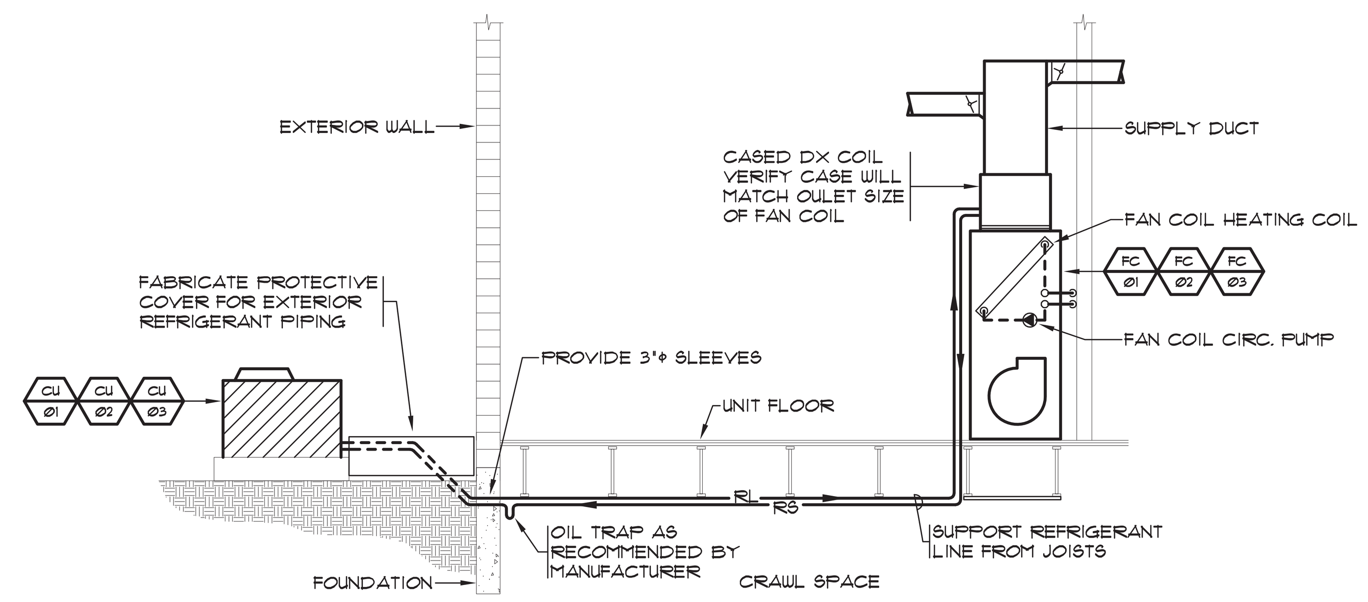

REFRIGERATION PIPING DIAGRAM (A / M0.1E)

SCALE: NONE

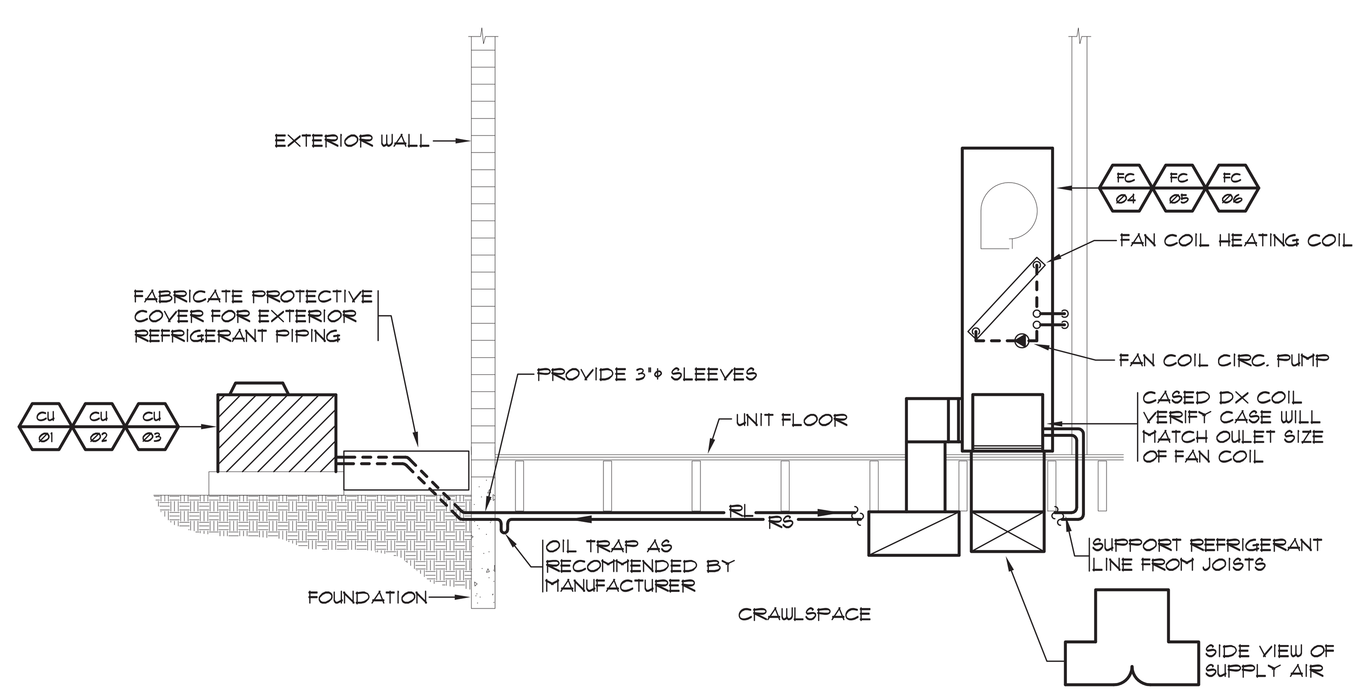

REFRIGERATION PIPING DIAGRAM (B / M0.1E)

SCALE: NONE

DUCTWORK LEGEND - CONSTANT VOLUME SYSTEMS

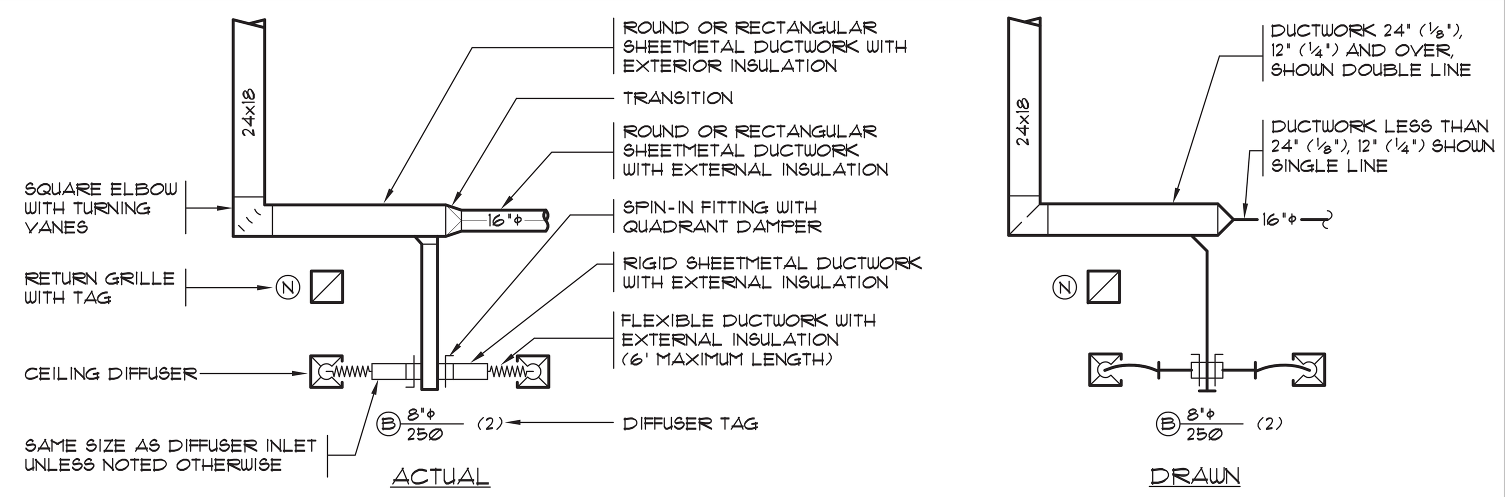

LEGEND (NOT ALL ITEMS WILL BE USED)

ABBR.	SYMBOL	DESCRIPTION
HWS, HWR	HWS — HWR	HOT WATER SUPPLY AND RETURN PIPING
CHS, CHR	CHWS — CHWR	CHILLED WATER SUPPLY AND RETURN PIPING
		UNION, FLANGE, BLIND FLANGE
		SOV GATE VALVE, BALL VALVE, GLOBE VALVE, BUTTERFLY VALVE
		CHECK VALVE, STRAINER
		LUBRICATED PLUG VALVE, BALANCING VALVE
		PIPE ELBOW DOWN, PIPE TEE DOWN, PIPE TEE UP, PIPE ELBOW UP
		PIPE ANCHOR, PIPE GUIDE, PIPE SLEEVE
		FLEX CONNECTION, PIPE EXPANSION JOINT
		SQUARE DUCT ELBOW WITH TURNING VANES
		DOWN AND BACK UP UNDER BEAM OR OBSTACLE
		SUPPLY AIR, RETURN/OUTSIDE AIR AND EXHAUST AIR
		DUCTWORK UNLINED AND DUCTWORK LINED
		FLEXIBLE AND RIGID ROUND DUCT
		DUCTWORK TO BE REMOVED
		FIRE, SMOKE, COMBINATION FIRE AND SMOKE, RADIATION SMOKE AND RADIATION DAMPERS
		BAROMETRIC, MOTORIZED AND MANUAL DAMPERS, SMOKE DETECTOR
		PRESSURE DIFFERENTIAL SWITCH
T, H, TT, CO, C2		THERMOSTAT, HUMIDISTAT, TEMPERATURE TRANSMITTER, CARBON MONOXIDE OR CARBON DIOXIDE SENSOR
		WORK NOTE 1, REVISION NO. 1, DEMOLITION NOTE 1, POINT OF CONNECTION
		SUPPLY AIR, RETURN AIR/EXHAUST AIR/OUTSIDE AIR FLOW ARROWS
SA, RA, EA, OA		SUPPLY AIR, RETURN AIR, EXHAUST AIR, OUTSIDE AIR
		SECTION A ON SHEET M-1 DIAGRAM 1 ON SHEET M-1 RISER R-1 ON SHEET M-1
	EQUIPMENT TYPE / EQUIPMENT NUMBER	EQUIPMENT TAG

DRAWING INDEX

REVISIONS

- ● ISSUED FOR CONSTRUCTION
- ○ ISSUED FOR REFERENCE ONLY, NOT FOR CONSTRUCTION

NUMBER	DRAWING TITLE	REVIEW 03/24/17	FOR BID 03/29/17	1 ISSUE DATE	2 ISSUE DATE	3 ISSUE DATE	4 ISSUE DATE	5 ISSUE DATE
M0.1E	DRAWING INDEX, GENERAL NOTES, LEGENDS AND SCHEDULES	○	●					
M1.1E	FIRST AND SECOND FLOOR - BUILDING E - HVAC	○	●					

DUCT SYSTEM NOTES

1. ALL DUCTWORK UNLESS SPECIFICALLY INDICATED SHALL BE GALVANIZED SHEET METAL INSTALLED IN ACCORDANCE WITH THE SMACNA DUCT CONSTRUCTION STANDARDS:
   PRESSURE CLASS "+2", SEAL CLASS B.
   DIMENSIONS SHOWN ARE NET CLEAR INSIDE DIMENSIONS. ALLOWANCES MUST BE MADE FOR DUCT LINER WHERE CALLED FOR.
2. ALL SUPPLY DUCTWORK SHALL HAVE ALL JOINTS SEALED WITH "HARDCAST" OR EQUAL DUCT SEALER/MASTIC.
3. ALL CONCEALED, ROUND SUPPLY AIR DUCTS 12" AND SMALLER SHALL BE GALVANIZED SHEET METAL SNAP-LOCK. ROUND SUPPLY DUCT GREATER THAN 12" SHALL BE GALVANIZED SHEET METAL SPIRAL. PROVIDE 1" FIBERGLASS INSULATION WRAP. INSULATED FLEXIBLE DUCT MAY BE USED FOR THE CONNECTION TO THE AIR OUTLET PROVIDED THE LENGTH OF THE FLEXIBLE DUCT DOES NOT EXCEED 6 LINEAR FEET.
4. FACTORY MADE AIR DUCTS SHALL CONFORM TO UL 181 AND INCLUDE APPROPRIATE LABEL. FLEXIBLE DUCTWORK SHALL BE APPROVED CLASS 0 OR CLASS 1. LENGTH NOT TO EXCEED 6'-0".
5. ALL BRANCH DUCT CONNECTIONS TO AIR OUTLETS AND AIR INLETS SHALL BE THE SAME SIZE AS THE DEVICE NECK UNLESS SHOWN OTHERWISE ON THE DRAWINGS.
6. ALL ENVIRONMENTAL AIR EXHAUST DUCTS SHALL BE SEALED WITH "HARDCAST" OR EQUAL.
7. DUCT HANGERS SHALL BE A MINIMUM 1½"x26 GAUGE GALVANIZED STEEL.
8. PROVIDE SINGLE THICKNESS TURNING VANES IN ALL SQUARE AND RECTANGULAR ELBOWS IN SUPPLY, RETURN SYSTEMS.
9. ALL FIRE DAMPERS SHALL BE LABELED FOR USE IN DYNAMIC SYSTEMS UNLESS OTHERWISE SPECIFIED.

GENERAL NOTES - HVAC

1. RESOLVE ALL QUESTIONS OR CONFLICTS WITH ENGINEER BEFORE ANY EQUIPMENT IS ORDERED, MATERIALS FABRICATED OR SYSTEMS INSTALLED.
2. COORDINATE THE INSTALLATION OF MECHANICAL SYSTEMS WITH OTHER TRADES, ESPECIALLY STRUCTURAL, PLUMBING, ELECTRICAL AND ARCHITECTURAL CEILING HEIGHTS.
3. COORDINATE ALL PENETRATIONS THROUGH STRUCTURAL MEMBERS WITH THE GENERAL CONTRACTOR.
4. COORDINATE AND VERIFY THAT ALL OPENINGS IN WALLS ABOVE CEILING / DOOR LOUVERS / DOOR UNDERCUTS ARE PROVIDED AS INDICATED ON THESE DRAWINGS.
5. LEVEL ALL EQUIPMENT CURBS / BASES PRIOR TO INSTALLATION OF ANY EQUIPMENT. INSTALL FULL SIZE CONDENSATE DRAIN WITH TRAP SEAL DEPTH EQUAL TO 1.5 x UNIT TOTAL STATIC PRESSURE FOR EACH COOLING COIL. ENSURE THAT THE TOP OF GROUND MOUNTED EQUIPMENT PADS ARE AT LEAST 3" ABOVE FINAL GRADE.
6. PROVIDE OFFSETS AS NECESSARY TO ACCOMMODATE STRUCTURE AND OTHER TRADES.
7. ALL BUILDING EXHAUSTS/VENTS TO BE MINIMUM 10'-0" FROM BUILDING VENTILATION INTAKES.
8. SEAL ALL ROOF PENETRATIONS WATERTIGHT WITH SEALANT/CAULKING OR SYSTEM COMPATIBLE WITH ROOFING.
9. ALL PIPING PENETRATIONS THROUGH FLOORS SHALL BE SEALED WATERTIGHT BY GROUTING PERIMETER GAP BETWEEN PIPE AND FLOOR STRUCTURE OR BY USING UL APPROVED SLEEVE AND SEALER SYSTEM. PENETRATIONS OF RATED WALLS SHALL USE SLEEVE WITH UL APPROVED SEALANT.
10. MATERIALS EXPOSED IN PLENUMS SHALL HAVE A FLAME SPREAD INDEX OF NOT MORE THAN 25 AND A SMOKE DEVELOPED RATING OF NOT MORE THAN 50.
11. BIRD SCREEN, UNLESS OTHERWISE SPECIFIED, SHALL BE ¼" STEEL MESH.
12. INSTALLATION SHALL CONFORM TO THE REQUIREMENTS OF THE 2015 INTERNATIONAL MECHANICAL CODE, APPLICABLE SECTIONS OF THE INTERNATIONAL BUILDING CODE AND APPLICABLE SECTIONS OF THE PUEBLO BUILDING CODE.

FAN COIL SCHEDULE

NOTES: 1) UPFLOW CONFIGURATION. 2) DOWN FLOW CONFIGURATION. 3) DISPOSABLE FILTER. 4) EC MOTOR ON BLOWER. 5) MICRO-PROCESSOR CIRCUIT BOARD. 6) FACTORY MOUNTED 410A COOLING COIL WITH EXPANSION VALVE. 7) UNIT SUPPLIED AND SET IN PLACE WITH CONDENSING UNIT BY HVAC CONTRACTOR. 8) PROGRAMMABLE THERMOSTAT. 9) PLUMBER TO MAKE HYDRONIC PIPING CONNECTIONS. 10) PROVIDE WITH 3-ROW HEATING COIL, TACO 006 CIRC. PUMP, CHECK VALVE AND SCHRADER PORTS. 11) INTEGRAL PUMP OPERATES FOR 60 SECONDS EVERY 6 HOURS. 12) REARRANGEMENT OF DX COIL REQUIRED.

TAG	MANUF.	MODEL	CFM	ESP "WC	HYDRONIC HEAT COIL MBH-OUT	HYDRONIC HEAT COIL GPM	BLOWER HP	CIRC. PUMP HP	CIRC. PUMP INLET WATER	MCA	ELECTRICAL VOLTS/φ	ELECTRICAL MAX. FUSE	WEIGHT LBS	NOTES
FC-01	AIRMARK	GFM 18/19	650	0.3	30.5	3.5	1/3	1/40	140	4.1	115/1	15	100	1,3,4,5,6,7,8,9,10,11
FC-02	AIRMARK	GFM 24/25	800	0.3	35.3	3.5	1/3	1/40	140	4.1	115/1	15	100	1,3,4,5,6,7,8,9,10,11
FC-03	AIRMARK	GFM 30/31	1050	0.3	39.1	3.5	1/2	1/40	140	7.4	115/1	20	120	1,3,4,5,6,7,8,9,10,11
FC-04	AIRMARK	GFM 18/19	650	0.3	30.5	3.5	1/3	1/40	140	4.1	115/1	15	100	2,3,4,5,6,7,8,9,10,11,12
FC-05	AIRMARK	GFM 24/25	800	0.3	35.3	3.5	1/3	1/40	140	4.1	115/1	15	100	2,3,4,5,6,7,8,9,10,11,12
FC-06	AIRMARK	GFM 30/31	1050	0.3	39.1	3.5	1/2	1/40	140	7.4	115/1	20	120	2,3,4,5,6,7,8,9,10,11,12

ELECTRIC HEATER SCHEDULE

NOTES: 1) INTEGRAL THERMOSTAT. 2) SEMI-RECESSED MOUNT. 3) DISCONNECT SWITCH. 4) MOUNT 12" A.F.F. 5) HEAVY DUTY GRILLE.

TAG	MANUFACTURER	MODEL	KW	BTU	VOLTS/φ	NOTES
EH-01	RAYWALL	E3323TD-RP	1.5	5120	120/1	1, 2, 3, 4

GRILLE, REGISTER, AND DIFFUSER SCHEDULE

NOTES: 1) STANDARD FACTORY BROWN FINISH. 2) VOLUME DAMPER. 3) SEE DRAWINGS FOR NECK SIZE AND AIR QUANTITY.

TAG	MANUF.	MODEL	DESCRIPTION	NOTES
(A)	HART & COOLEY	420/421	SUPPLY DIFFUSER, 2-WAY DEFLECTION, STEEL CONSTRUCTION, FLOOR MOUNT	1, 2, 3
(B)	HART & COOLEY	650	RETURN GRILLE, 35° DEFLECTION, ½" SPACING, STEEL CONSTRUCTION, SIDEWALL MOUNT	1, 3

CONDENSING UNIT AND DX COOLING COIL SCHEDULE

NOTES: 1) PROVIDE REFRIGERATION PIPING ACCORDING TO MANUFACTURERS RECOMMENDATIONS. 2) SCROLL COMPRESSOR. 3) 16 SEER. 4) R-410A REFRIGERANT. 5) CURVED LOUVER PANELS. 6) LIQUID LINE ⅜", SUCTION LINE ¾". 7) CC IS INTEGRAL TO FAN COIL.

TAG	MANUFACTURER	CU MODEL	NOMINAL TONS	ELECTRICAL VOLTS/φ	ELECTRICAL MCA	ELECTRICAL MOP	WEIGHT (LBS)	SERVES	NOTES
CU-01	CARRIER	24ANB618A003	1.5	230/1	11.7	20	184	FC-01, 04	1, 2, 3, 4, 5, 6, 7
CU-02	CARRIER	24ANB624A003	2.0	230/1	17.5	25	186	FC-02, 05	1, 2, 3, 4, 5, 6, 7
CU-03	CARRIER	24ANB630A003	2.5	230/1	18	25	193	FC-03, 06	1, 2, 3, 4, 5, 6, 7

EXHAUST FAN SCHEDULE

NOTES: 1) INCLUDES WHITE PLASTIC GRILLE. 2) MEETS ENERGY STAR RATINGS AND ASHRAE STD 62.2. 3) BACKDRAFT DAMPER. 4) INCLUDE MULTI-SPEED MODULE. 5) SWITCH WITH LIGHT SWITCH. 6) CONTINUOUS VENTILATION.

TAG	MANUF.	MODEL	CFM MIN/MAX	ESP "WC	TYPE	DRIVE	SONES	WATTS	VOLTS/φ	NOTES
EF-01	PANASONIC	FV-05-11VK1	30/80	0.40	CEILING	DIRECT	.5	25	120/1	1, 2, 3, 4, 5, 6

RANGE HOOD SCHEDULE

NOTES: 1) INCLUDE BACKDRAFT DAMPER. 2) 30" WIDTH. 3) 75 WATT LIGHT. 4) 2-SPEED. 5) OWNER TO CHOOSE COLOR.

TAG	MANUFACTURER	MODEL	TYPE	CFM	SONES	VOLTS/φ	MCA	NOTES
RH-01	BROAN	42300	7"φ VENTED	190	6.0	120/1	2.5	1, 2, 3, 4, 5

DRAWING LIMITS: 42, 30
DRAWING SIZE: 42x30
PLOT SCALE: 1:1
DRAWING NO:2016126.00 M0.1E

WORK NOTES (THIS SHEET ONLY)

1. FAN COIL UNIT TO BE SUPPLIED BY MECHANICAL (HVAC) CONTRACTOR. COORDINATE WITH PLUMBING CONTRACTOR FOR PIPING CONNECTIONS. INSTALL PER MANUFACTURER'S RECOMMENDATIONS.
2. TANKLESS WATER HEATER TO BE VENTED THROUGH THE ROOF BY PLUMBING CONTRACTOR USING CONCENTRIC POLYPROPYLENE CA AND FLUE THROUGH THE ROOF ACCORDING TO MANUFACTURER'S RECOMMENDATIONS.
3. FAN COIL UNIT HAS A HYDRONIC HEATING COIL. SEE PIPING DIAGRAM AND PLUMBING DRAWINGS FOR CONNECTION REQUIREMENTS TO TANKLESS WATER HEATER.
4. 6"ø INSULATED OA DUCT RUNNING HIGH TO THE OUTSIDE WALL. TERMINATE WITH A WEATHER CAP. THIS MUST BE 10 FEET AWAY FROM ANY EXHAUST.
5. ALL SA AND RA DUCTWORK TO BE ROUTED HIGH BETWEEN JOISTS WHERE POSSIBLE.
6. PAN JOISTS FOR RA OPENINGS.
7. MOUNT RA GRILLE HIGH IN WALL.
8. UNDERCUT DOOR BY APPROXIMATELY 1".
9. 12x12 TRANSFER AIR DUCT FOR DRYER. LOCATE HIGH IN WALL.
10. MOUNT IN CABINET TOE KICK.
11. INSTALL RANGE HOOD WITH DUCT TERMINATING HIGH ON OUTSIDE WALL WITH WEATHER CAP.
12. RUN DRYER 4"ø VENT THROUGH THE WALL. TERMINATE WITH DRYER VENT CAP.
13. INSTALL ALL COMPONENTS ACCORDING TO MANUFACTURER'S RECOMMENDATIONS. COORDINATE WITH ELECTRICAL FOR WALL SWITCH. RUNS CONTINUOUSLY ON LOW BUT WILL INCREASE TO HIGH WITH SWITCH.
14. INSTALL A 4" ROUND DUCT FROM THE CRAWL SPACE TO THE ROOF.
15. DROP A 4"ø DUCT INTO THE CRAWL SPACE FOR APPROXIMATELY 30 CFM.
16. RUN RA DUCT UP AGAINST STRUCTURE THEN FLAIR TO FIT RA GRILLE.
17. 4"ø DUCT FROM BELOW TO ROOF. TERMINATE WITH A ROOF CAP.
18. 7" CONCENTRIC VENT FROM TANKLESS WATER HEATER TO ROOF. TERMINATE WITH UBBINK VENT, PART NO. 184162PP. RUN VENT THROUGH CABINET.
19. RUN DUCTWORK IN JOIST SPACE THEN DROP DOWN TO RUN IN SOFFIT.
20. RUN 4"ø EA DUCT UP THROUGH ROOF. TERMINATE WITH A WEATHER CAP.
21. SET THE CONDENSING UNIT ON A 3" LEVEL EQUIPMENT PAD.
22. PROVIDE LINE SETS SIZED PER MANUFACTURER'S RECOMMENDATIONS. COVER BOTH LIQUID AND SUCTION LINES WITH CLOSED CELL INSULATION THEN WRAP WITH WATER PROOF COVER WHERE LINES ARE BURIED. SLEEVE FOUNDATION APPROXIMATELY 5' BELOW GRADE WITH (2) 3" DIAMETER PIPES.
23. ALL SA AND RA DUCTWORK TO BE ROUTED IN THE CRAWL SPACE. WRAP DUCT WITH 1½" OF FIBERGLASS INSULATION WITH VAPOR BARRIER.
24. RUN DRYER VENT IN CRAWL SPACE THEN UP IN OUTSIDE WALL TERMINATING 18" ABOVE GRADE WITH A DRYER VENT CAP. KEEP APPROXIMATELY 10' DISTANCE FROM OA INTAKE.
25. OFFSET 7" CONCENTRIC VENT FROM TANKLESS WATER HEATER TO ROOF. TERMINATE WITH UBBINK VENT, PART NO. 184162PP.
26. INSTALL A 3"ø SPIN-IN IN THE SA DUCT WITH A BALANCING DAMPER. THIS IS TO PROVIDE APPROXIMATELY 30 CFM OF SA FOR CRAWL SPACE VENTILATION. THIS MEETS THE 0.02 CFM/SF REQUIREMENT.

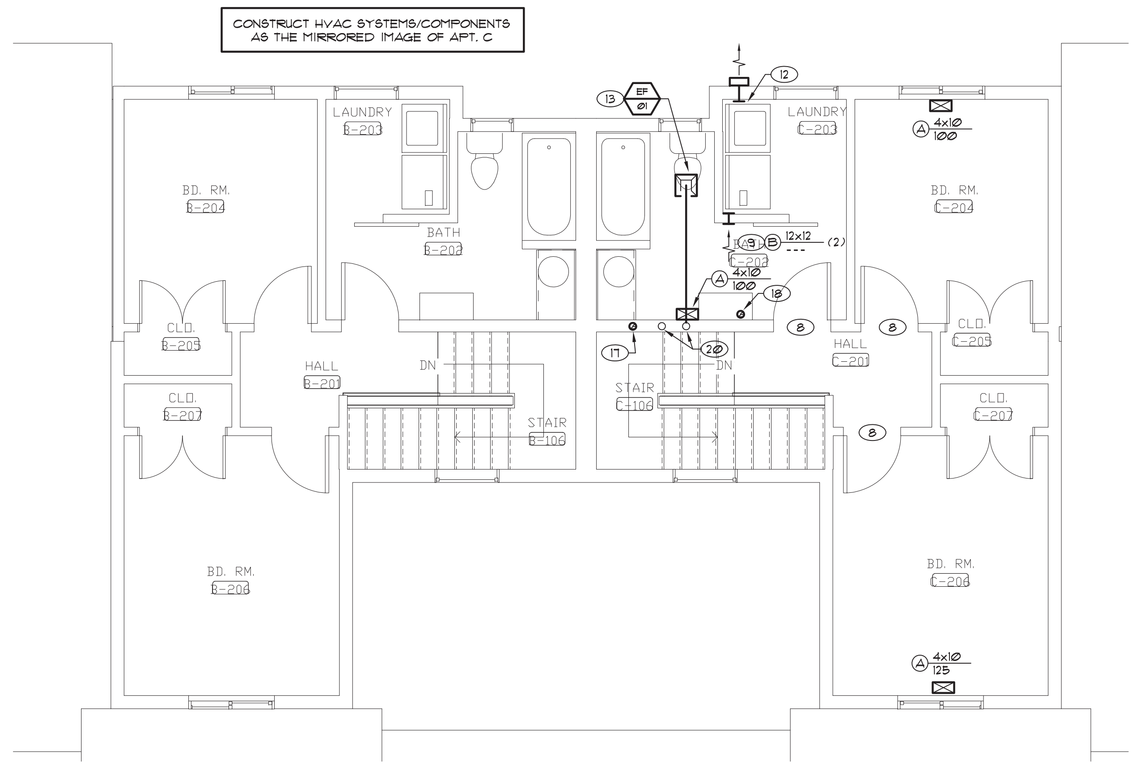

2nd FLOOR - BLDG E - HVAC

SCALE: 1/4" = 1'-0"

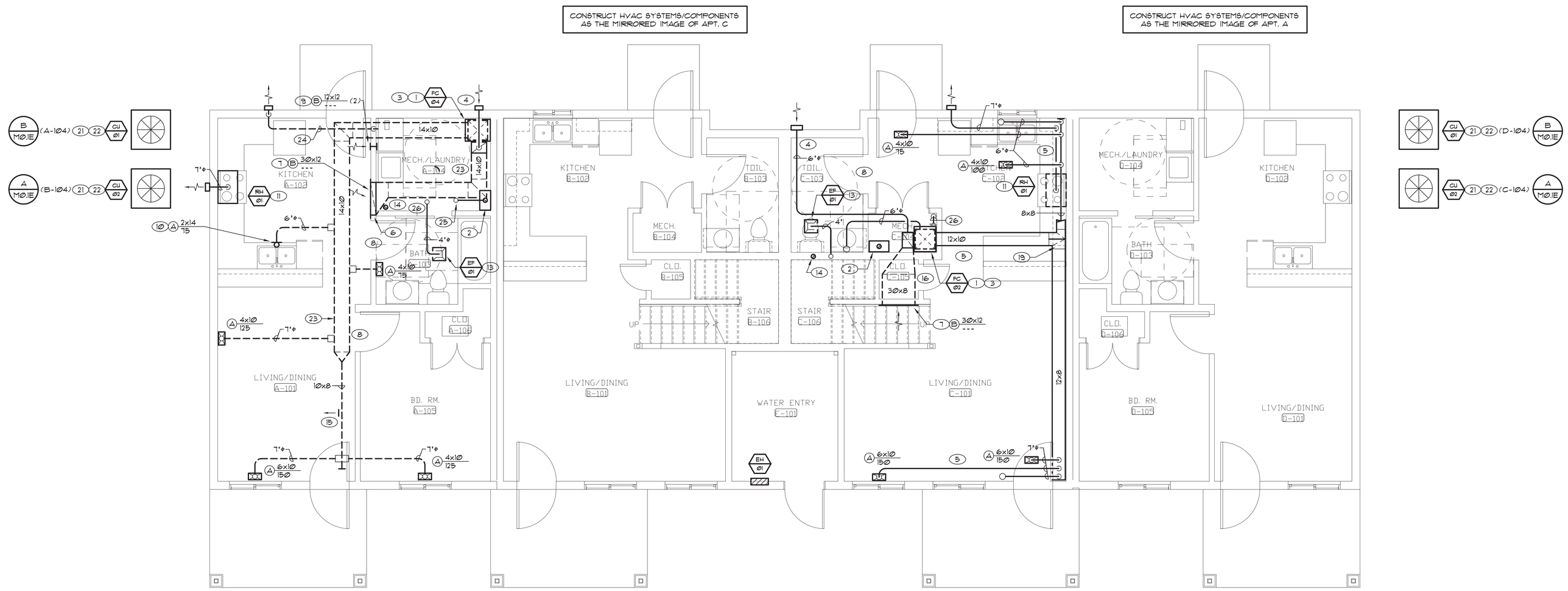

1st FLOOR - BLDG E - HVAC

SCALE: 1/4" = 1'-0"

DRAWING LIMITS: 36x24
DRAWING SIZE: 36x24
PLOT SCALE: 1:1
DRAWING NO:2016126020 M1E

HGIF ARCHITECTS

AE Associates, Inc.
Engineering Successful
Building Partnerships
309 N. Pitkin St., Suite 200
Gunnison, Colorado 81230
(970) 641-1928
FAX (970) 641-4414

HOUSING AUTHORITY OF THE CITY OF PUEBLO

UPLANDS TOWNHOMES
DEVELOPED BY THE HOUSING AUTHORITY OF PUEBLO
PROJECT No: LF.B. 17-824-RAD
ACERO AVE. and SPRAGUE AVE., PUEBLO, COLORADO 81004

DATE	03/29/2017
DRAWN	CAD
CHECK	RDL
REVISIONS:	
SHEET	M1.1E

COLORADO REGISTERED PROFESSIONAL ENGINEER
ROGER D. LEMMON
32686
03/29/2017

LEGEND (NOT ALL ITEMS WILL BE USED)

ABBR.	SYMBOL	DESCRIPTION
SW, CW, NP	SW — NP	SOFT, COLD AND NON-POTABLE WATER PIPING
F	F	FIRE PROTECTION PIPING
HW, HWC	(140°F) — (140°F)	HOT WATER AND HOT WATER CIRCULATING PIPING
G	G (5 PSIG)	PRESSURE GAS PIPING
V, FOV	V — FOV	VENT AND FUEL OIL VENT PIPING
SS, GSS	SS — GSS	SANITARY SEWER AND GREASE SANITARY SEWER PIPING
SD, OSD	SD — OSD	STORM DRAIN AND OVERFLOW STORM DRAIN PIPING
RD, ORD	RDL — ODL	ROOF DRAIN LEADER, OVERFLOW DRAIN LEADER
FCO, WCO, COTG	FCO — WCO — COTG	FLOOR CLEANOUT, WALL CLEANOUT AND CLEANOUT TO GRADE
		PIPING TO BE REMOVED
		UNION, FLANGE, BLIND FLANGE
		SOV GATE VALVE, BALL VALVE, GLOBE VALVE, BUTTERFLY VALVE
		CHECK VALVE, STRAINER
		PLUG VALVE, CALIBRATED AND DYNAMIC BALANCING VALVES
		LUBRICATED PLUG VALVE
PRV		PRESSURE REDUCING VALVE
		THREE WAY CONTROL VALVE, SOLENOID AND TWO-WAY / MOTORIZED CONTROL VALVE
RPBP		REDUCED PRESSURE BACKFLOW PREVENTER
		ANGLE, RELIEF VALVE, GAUGE AND COCK, THERMOMETER
	TP	TEST PLUG
AAV / MAV, HEV	AAV, MAV — HEV	HOSE END DRAIN VALVE, AUTOMATIC AIR / MANUAL AIR VENT
HB, WH		HOSEBIBB, FROSTPROOF WALL HYDRANT, DOWN SPOUT NOZZLE
		PIPE ELBOW DOWN, PIPE TEE DOWN, PIPE TEE UP, PIPE ELBOW UP
		PIPE ANCHOR, PIPE GUIDE, PIPE SLEEVE
		FLEX CONNECTION, PIPE EXPANSION JOINT
VTR		VENT THRU ROOF
I.E.		INVERT ELEVATION
E, R, N	(E) (R) (N)	EXISTING, RELOCATED AND NEW
	1 1 1	WORK NOTE 1, REVISION NO. 1, DEMOLITION NOTE 1, POINT OF CONNECTION
	A M-1 / 1 M-1 / R-1	SECTION A ON SHEET M-1 DIAGRAM 1 ON SHEET M-1 RISER R-1 ON SHEET M-1
	WC-X: FIXTURE/EQUIPMENT TYPE; FIXTURE/EQUIPMENT NUMBER	FIXTURE OR EQUIPMENT TAG

DRAWING INDEX

NUMBER	DRAWING TITLE	REVIEW 03.24.17	FOR BID 03.29.17	1 ISSUE DATE	2 ISSUE DATE	3 ISSUE DATE	4 ISSUE DATE	5 ISSUE DATE
	REVISIONS	● ISSUED FOR CONSTRUCTION ○ ISSUED FOR REFERENCE ONLY, NOT FOR CONSTRUCTION						
P0.1E	DRAWING INDEX, GENERAL NOTES AND LEGENDS	○	●					
P0.2E	SCHEDULES AND DIAGRAMS	○	●					
P1.1E	CRAWL SPACE FLOOR - BUILDING E - PLUMBING	○	●					
P1.2E	FIRST AND SECOND FLOORS - BUILDING E - PLUMBING	○	●					

GENERAL NOTES - PLUMBING

1. COORDINATE THE INSTALLATION OF PLUMBING SYSTEMS WITH OTHER TRADES. OFFSET PIPING AS NECESSARY TO AVOID CONFLICTS WITH OTHER WORK AND STRUCTURAL ABOVE CEILING AND/OR BELOW FLOOR.
2. VERIFY EXACT LOCATION, SIZE AND INVERT ELEVATION OF ALL EXISTING UTILITIES AT SITE PRIOR TO INSTALLATION OF ANY PIPING SYSTEMS.
3. RESOLVE ALL QUESTIONS OR CONFLICTS WITH THE ENGINEER BEFORE ANY EQUIPMENT IS ORDERED, MATERIALS FABRICATED OR SYSTEMS INSTALLED.
4. REFER TO THE ARCHITECTURAL DRAWINGS FOR THE EXACT LOCATION OF THE PLUMBING FIXTURES.
5. SEAL ROOF PENETRATIONS WATERTIGHT WITH ROOF SYSTEM COMPATIBLE WITH ROOFING.
6. ALL PIPING PENETRATIONS THROUGH FLOORS SHALL BE SEALED WATER TIGHT BY GROUTING PERIMETER GAP BETWEEN PIPE AND FLOOR STRUCTURE, OR BY USING APPROVE UL SLEEVE AND SEALER SYSTEM. PENETRATIONS OF RATED WALLS SHALL USE SLEEVE WITH UL APPROVED FIRE SEALANT.
7. DOMESTIC WATER PIPING LOCATED IN CRAWL SPACE OF BUILDINGS SHALL BE TYPE "L" HARD COPPER WITH WROUGHT COPPER FITTINGS. NO LEAD SOLDER OR "PROPRESS" TO BE USED FOR FITTINGS THROUGHOUT.
8. PIPING WITHIN UNIT CONNECTING FIXTURES FROM POINT IN MECHANICAL CLOSETS INDICATED ON PLANS, SHALL BE CROSS LINKED PEX PIPING WITH SPECIFIC MANUFACTURER FITTINGS.
9. INSULATE ALL DOMESTIC WATER PIPING PER INSULATION SCHEDULES SHOWN IN PROJECT SPECIFICATIONS.
10. WASTE AND VENT PIPING SHALL BE SCHEDULE 40 PVC DWV WITH SOLVENT CEMENTED FITTINGS. SLOPE ALL WASTE PIPING AT ¼" PER FOOT MINIMUM UNLESS OTHERWISE NOTED. PVC PIPING SHALL NOT BE USED IN RETURN AIR PLENUMS.
11. MAINTAIN THE UNIFORM SLOPE SHOWN ON THE PLANS FOR THE SANITARY SEWER, STORM DRAIN AND CONDENSATE DRAIN PIPING SYSTEMS.
12. SUPPORT ALL CAST IRON SOIL PIPE, PVC PIPING, COPPER PIPE AND STEEL PIPE RISERS AT EVERY STORY MINIMUM.
13. ALL SANITARY VENTS SHALL BE LOCATED MINIMUM 10'-0" FROM BUILDING OUTSIDE AIR INTAKES.
14. INSTALLATION SHALL CONFORM TO 2015 INTERNATIONAL PLUMBING CODE, APPLICABLE SECTIONS OF THE INTERNATIONAL BUILDING CODE AND APPLICABLE SECTIONS OF THE PUEBLO BUILDING CODE.

FIRE PROTECTION NOTES

1. PROVIDE A NEW HYDRAULICALLY CALCULATED FIRE SPRINKLER SYSTEM IN ACCORDANCE WITH THE LATEST EDITIONS OF UBC, UFC, AND **NFPA 13R**. COVERAGE WILL INCLUDE LIVING SPACES, MECHANICAL SPACES AND ATTIC SPACES.
2. THE CONTRACTOR SHALL BE RESPONSIBLE FOR THE DESIGN OF THE SYSTEM AND SHALL FURNISH TO THE ARCHITECT ALL DESIGN CALCULATIONS, SHOP DRAWINGS OF THE SYSTEM, AND CATALOG DATA OF ALL EQUIPMENT AS PART OF REQUIRED SUBMITTAL DATA IN SPECIFICATIONS. REFER TO SHEETS P3 AND P4.
3. SHOP DRAWINGS SHALL INDICATE THE LOCATION OF ALL SPRINKLER HEAD AND PIPING COORDINATED WITH THE LOCATION OF ALL STRUCTURAL MEMBERS, HVAC EQUIPMENT, LIGHT FIXTURES, CEILING DIFFUSERS, REGISTERS AND PIPING.
4. THE LAYOUT, SUPERVISION AND INSTALLATION OF FIRE PROTECTION SYSTEMS IS A TRADE IN ITSELF AND SHALL BE PERFORMED ONLY BY FULLY SKILLED, EXPERIENCED AND RESPONSIBLE PARTIES. THE PROSPECTIVE FIRE PROTECTION CONTRACTOR MAY BE REQUIRED TO SHOW, TO THE SATISFACTION OF THE ARCHITECT, SUCH SKILL, EXPERIENCE, AND RESPONSIBILITY.
5. PERFORM WORK IN STRICT COMPLIANCE WITH THESE SPECIFICATIONS AND DRAWINGS, THE REQUIREMENTS OF THE STATE CERTIFIED SUPPRESSION INSPECTOR, AND ALL APPLICABLE CODES, ORDINANCES, STANDARDS, AND STATUTES IN EFFECT AT THE BUILDING SITE.
6. ADHERE TO THE MOST RECENT EDITION OF THE FOLLOWING PUBLICATIONS: TOGETHER WITH THE LATEST REVISIONS, SUPPLEMENTS, AND AMENDMENTS THERETO:
   A. NATIONAL FIRE PROTECTION ASSOCIATION (NFPA) STANDARD 13.
   B. UNDERWRITERS' LABORATORIES, INC. (UL), FIRE PROTECTION EQUIPMENT LIST.
   C. CITY OF PUEBLO FIRE AUTHORITY.
7. OBTAIN AND PAY FOR ALL NECESSARY PERMITS PRIOR TO STARTING WORK. OBTAIN CERTIFICATES, APPROVALS, AND/OR ACCEPTANCES OF ALL INTERESTED PARTIES AND AUTHORITIES HAVING JURISDICTION.
8. PIPING TO BE IRON, STEEL OR CPVC, IN WEIGHTS AND GAUGES APPROVED BY NFPA 13 FOR USE IN FIRE PROTECTION SYSTEMS. FITTINGS SHALL BE APPROVED FOR USE WITH THE INSTALLED SPRINKLER PIPING, WITH A MINIMUM WORKING PRESSURE OF 175 PSI.
9. NOTIFY OWNER, ARCHITECT AND ALL AUTHORITIES HAVING JURISDICTION, NOT LESS THAN SEVENTY-TWO (72) HOURS PRIOR TO FINAL TESTING. DO NOT PERMIT INTERIOR PIPING TO BE CONCEALED IN ANY WAY UNTIL ALL HYDROSTATIC AND OTHER TESTS AND INSPECTIONS HAVE BEEN SATISFACTORILY COMPLETED. CONDUCT ALL TESTS IN ACCORDANCE WITH NFPA STANDARDS AND ALL APPLICABLE CODES AND ORDINANCES. PROVIDE ALL NECESSARY PERSONNEL, CORRECT ALL DEFECTS, DEFICIENCIES, REPAIR ALL LEAKS AND RE-TEST AS REQUIRED.

COLORADO REGISTERED PROFESSIONAL ENGINEER
ROGER D. LEMMON
32686
03/29/2017

HGIF ARCHITECTS

HOUSING AUTHORITY OF THE CITY OF PUEBLO

AE Associates, Inc.
Engineering Successful Building Projects
300 West Pitkin Street, Suite 200
Colorado Springs, Colorado 80907
(719) 635-3420
FAX (719) 635-4414

UPLANDS TOWNHOMES
DEVELOPED BY THE HOUSING AUTHORITY OF PUEBLO
PROJECT No: LF.B. 17-824-RAD
ACERO AVE. and SPRAGUE AVE., PUEBLO, COLORADO 81004

DATE 03/29/2017
DRAWN CAD
CHECK RDL
REVISIONS:

SHEET P0.1E

DRAWING LIMITS: 42,30
DRAWING SIZE: 42x30
PLOT SCALE: 1=1
DRAWING NO:2016\16020 P0.1E

PLUMBING EQUIPMENT SCHEDULE

NOTES:

TAG	EQUIPMENT DESCRIPTION
	PLUMBING
FCO	FLOOR CLEAN OUT. SMITH FIGURE 4021 STANDARD FLOOR CLEANOUT WITH SCORIATED ROUND NICKEL BRONZE TOP.
WCO	WALL CLEAN OUT. SMITH FIGURE 4732 WITH CLEANOUT TEE, BRONZE THREADED PLUG, STAINLESS STEEL WALL COVER AND CENTER SCREW.
CO	PLUG CLEAN OUT. END OF LINE OR TURN WITH CLEANOUT ADAPTER AND CLEANOUT PLUG WITH RAISED NUT.
DW-1	DISHWASHER. ADA ACCESSIBLE, GE BUILT-IN DISHWASHER MODEL NUMBER GLDT690JWW, 24", WHITE COLOR, ENERGY STAR COMPLIANT. PROVIDE WITH DRAIN HOSE AND ELECTRICAL CONNECTION. WATER SUPPLY BY CONTRACTOR (ALTERNATE SUBSTITUTES TO BE APPROVED BY OWNER).
DW-2	DISHWASHER. GE BUILT-IN DISHWASHER MODEL NUMBER GDF520PGJWW, 24", WHITE COLOR, ENERGY STAR COMPLIANT. PROVIDE WITH DRAIN HOSE AND ELECTRICAL CONNECTION. WATER SUPPLY BY CONTRACTOR (ALTERNATE SUBSTITUTES TO BE APPROVED BY OWNER).
FD-1	EQUIPMENT ROOM DRAIN. SMITH FIGURE 2270S WITH SEDIMENT BUCKET, SQUARE NICKEL BRONZE 1/2 GRATE TOP. PROVIDE WITH TRAP SEAL.
FS-1	FLOOR SINK. SMITH FIGURE 3150, CAST IRON FLANGED RECEPTOR WITH ACID RESISTANT INTERIOR, WITH SEDIMENT BUCKET, ½ NICKEL BRONZE GRATE, 12½" TOP WITH DEEP SEAL TRAP (WATER ENTRY ROOMS). PROVIDE WITH TRAP SEAL.
FWH-1	WALL HYDRANT. WOODFORD MODEL 67, FREEZELESS WALL HYDRANT, AUTOMATIC DRAWING WITH VACUUM BREAKER, ¾" HOSE THREAD NOZZLE AND LOOSE TEE KEY.
FWH-2	WALL HYDRANT. LAWN SPRINKLER SUPPLY VALVE. WOODFORD MODEL 32, FREEZELESS WALL HYDRANT, AUTOMATIC DRAWING WITH VACUUM BREAKER, 1" HOSE THREAD NOZZLE AND LOOSE TEE KEY.
PET-1	POTABLE EXPANSION TANK. AMTROL THER-X-TROL ST-12, 4.5 GALLON ACCEPTANCE FACTOR, 4.4 GALLON TOTAL VOLUME, 50 PSIG MIN. AND 150 PSIG MAX. OPERATING PRESSURE, FDA APPROVED. OPERATING WEIGHT IS 13 LBS. ¾" CW.
SA-1	SHOCK ABSORBER. SMITH FIGURE 5005. PROVIDE WITH ISOLATION VALVE.
WB-1	WALL BOX FOR WASHING MACHINE WATER/DRAIN CONNECTIONS. OATEY MODEL 38535 WM WITH WATTS #2 SINGLE LEVER SUPPLY VALVES, 2" DRAIN.
GD-1	FOOD WASTE DISPOSER, IN-SINK-ERATOR BADGER 5, CONTINUOUS FEED, GALVANIZED STEEL. 1/2 HP, 115 V.
WDP-1	WASHER SAFETY DRAIN PAN. CAMCO MODEL 20752, 30"x32", WHITE PLASTIC PAN 2.5" DEEP WITH 1" BOTTOM DRAIN CONNECTION. DRAIN CONNECTION IS FIELD CUT/INSTALLED.

TANKLESS WATER HEATER SCHEDULE

NOTES: 1) CONDENSING. 2) PROVIDE WITH HEAT TRAP FITTINGS AND VALVES. 3) PROVIDE VENTING SYSTEM AND CONCENTRIC VENT ADAPTOR WITH TERMINATION. 4) PROVIDE PRIORITY DEMAND TO DOMESTIC HOT WATER SYSTEM.

TAG	SERIES	MANUF.	MODEL	MIN/MAX INPUT MBH	EFFICIENCY	OUTLET TEMP °F	GPM @ 70°F RISE	ELECTRICAL		WEIGHT LBS	NOTES
								VOLTS/φ	MCA		
WH-1	1 BR UNIT	RINNAI	RUC80I	15.2 / 152	96%	120	4.2	120/1	8	62	1, 2, 3, 4
WH-2	2 BR UNIT	RINNAI	RUC90I	15.2 / 180	96%	120	5.0	120/1	8	62	1, 2, 3, 4
WH-3	3 BR UNIT	RINNAI	RUC98I	15.2 / 199	95%	120	5.5	120/1	8	62	1, 2, 3, 4

PLUMBING FIXTURE SCHEDULE

NOTES: 1) PROVIDE WITH 3 HOLE 4" CENTER SET FAUCET PUNCH. 2) PROVIDE WITH WATTS USG-B TEMPORARY VALVE SET 100°F. 3) PROFLO FIXTURES MAY BE SUBSTITUTED WITH OWNERS PERMISSION.

TAG	FIXTURE DESCRIPTION
WC-1	WATER CLOSET, ADA, MANSFIELD, 148-123, PRESSURE ASSISTED FLUSH TANK, SIPHON JET ACTION, 1.6 GPF, WHITE VITREOUS CHINA, ELONGATED BOWL. PROVIDE BEMIS 1200TC OPEN FRONT SEAT / COVER AND SUPPLY WITH ANGLE STOP. 4" SS, 2" V, ½" CW. REFER TO PLANS FOR RIGHT HAND/LEFT HAND CONFIGURATION. NOTE 3.
WC-2	WATER CLOSET, MANSFIELD, 147-123, PRESSURE ASSISTED FLUSH TANK, SIPHON JET ACTION, 1.6 GPF, WHITE VITREOUS CHINA, ELONGATED BOWL. PROVIDE BEMIS 1200TC OPEN FRONT SEAT / COVER AND SUPPLY WITH ANGLE STOP. 4" SS, 2" V, ½" CW. REFER TO PLANS FOR RIGHT HAND/LEFT HAND CONFIGURATION. NOTE 3.
LV-1	COUNTER TOP OVAL LAVATORY - MANSFIELD, 251-4, ROUND, WHITE VITREOUS CHINA, 4" FAUCET CENTERS. PROVIDE MOEN SINGLE LEVER FAUCET, MODEL ML4601-IHDL-LEV L-PU CP, "CHATEAU", 4" CENTERS, PROFLOW PF155A-CP WITH W/TLCP-CP, 1¼" GRID DRAIN, PROFLOW PF8617COH-CP OFFSET 1¼" CHROME PLATED 17 GAUGE P-TRAP WITH C.O. PLUG, CHROME PLATED 3/8" SUPPLIES AND LOOSE KEY ANGLE STOPS. PROVIDE PROFLOW INSULATION FOR P-TRAP AND WATER SUPPLIES. 2" SS, 1½" V, ½" HW, ½" CW. NOTES 2, 3.
LV-2	COUNTER TOP OVAL LAVATORY - MANSFIELD, 250-4, ROUND, WHITE VITREOUS CHINA, 4" FAUCET CENTERS. PROVIDE MOEN SINGLE LEVER FAUCET, MODEL ML4601-IHDL-LEV L-PU CP, "CHATEAU", 4" CENTERS, PROFLOW PF155A-CP WITH W/TLCP-CP, 1¼" GRID DRAIN, PROFLOW PF8617COH-CP OFFSET 1¼" CHROME PLATED 17 GAUGE P-TRAP WITH C.O. PLUG, CHROME PLATED 3/8" SUPPLIES AND LOOSE KEY ANGLE STOPS. 2" SS, 1½" V, ½" HW, ½" CW. NOTES 2, 3.
SH-1	SHOWER UNIT ADA WITH SEAT-ACCESSIBILITY PROFESSIONALS MODEL APTG6037BF3P, SINGLE PIECE SHOWER MODULE. PROVIDE 2" SHOWER DRAIN, THERMASTATICALLY CONTROLLED MIXING VALVE WITH INTEGRAL SERVICE STOPS, HAND HELD SHOWER SPRAY, 24" SLIDE GUIDE", 69" STAINLESS STEEL HOSE WITH SWIVEL FITTING, AND INLINE VACUUM BREAKER, FOLDING SEAT, SOAP DISH, SHOWER ROD, WHITE CURTAIN, OPTIONAL COLLAPSIBLE RUBBER WATER RETAINER, AND SEMI-PERMANENT THRESHOLD ADAPTER. 2" SS, 2" V, ½" HW, ½" CW. REFER TO PLANS FOR RIGHT HAND/LEFT HAND CONFIGURATION.
SK-1	COUNTER TOP ADA DOUBLE COMPARTMENT KITCHEN SINK-STERLING "MIDDLETON" 14633-3 20 GAUGE STAINLESS STEEL. PROVIDE MOEN M67308 WITH SIDE SPRAYER, BASKET STRAINER, 1½" P-TRAP AND ⅜" SUPPLIES WITH ANGLE STOPS. PROFLO TRAP COVERS. 2" SS, 1½" V, ½" HW, ½" CW.
SK-2	SAME AS SK-1.
TS-1	TUB/SHOWER KIT. STERLING MODEL V-60-HG, WHITE VIKRELL 4 PIECE DESIGN, PROVIDE MOEN 8343 PRESSURE BALANCED SHOWER VALVE, TUB DIVERTER AND SHOWER HEAD, HAND HELD SHOWER, 69" HOSE, 30" SLIDE BAR, VACUUM BREAKER, TUB FILLER, 2" TRIP LEVER GRID DRAIN/OVER FLOW. 2" SS, 2" V, ½" CW, ½" HW. REFER TO PLANS FOR RIGHT HAND/LEFT HAND CONFIGURATION. ADA INSTALLATION. NOTE 3.
TS-2	TUB/SHOWER KIT. STERLING MODEL V-60-HG, WHITE VIKRELL 4 PIECE DESIGN, PROVIDE MOEN 8339 PRESSURE BALANCED SHOWER VALVE, TUB DIVERTER AND SHOWER HEAD, 2" TRIP LEVER GRID DRAIN/OVER FLOW. 2" SS, 2" V, ½" CW, ½" HW. REFER TO PLANS FOR RIGHT HAND/LEFT HAND CONFIGURATION. NOTE 3.

FIRE PROTECTION EQUIPMENT SCHEDULE

TAG	FIXTURE DESCRIPTION
FDC-1	FIRE DEPT. CONNECTION. CROKER 2½"x2½" CAST BRASS 2-WAY INLET BODY WITH DOUBLE CLAPPERS AND PIN LUG SWIVELS, PLUGS AUTO SPRINKLER" BRANDING. THREADS TO MATCH PUEBLO FIRE DEPT. REQUIREMENTS.
DCV-1	DOUBLE CHECK VALVE ASSEMBLY. FEBCO MODEL 850 2" BRONZE BODY. UL. LISTED COMPLETE WITH BALL VALVES AND CHECK VALVE ASSEMBLY WITH FOUR VANDAL RESISTANT FULL PORT VALVE TESTCOCKS. FACTORY TESTED ASSEMBLED AND TESTED.

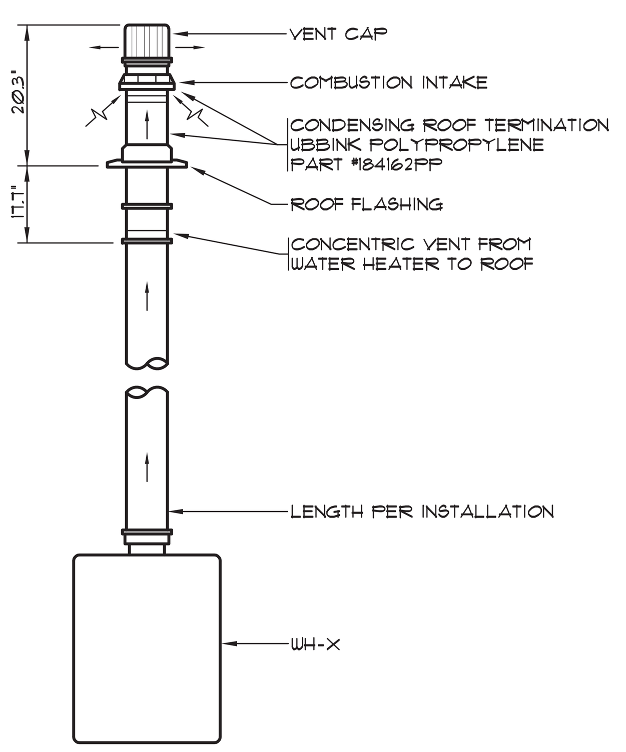

* INSTALL CONCENTRIC VENTING PER MANUFACTURER'S REQUIREMENTS

WATER HEATER VENTING (D / P0.2E)

SCALE: NONE

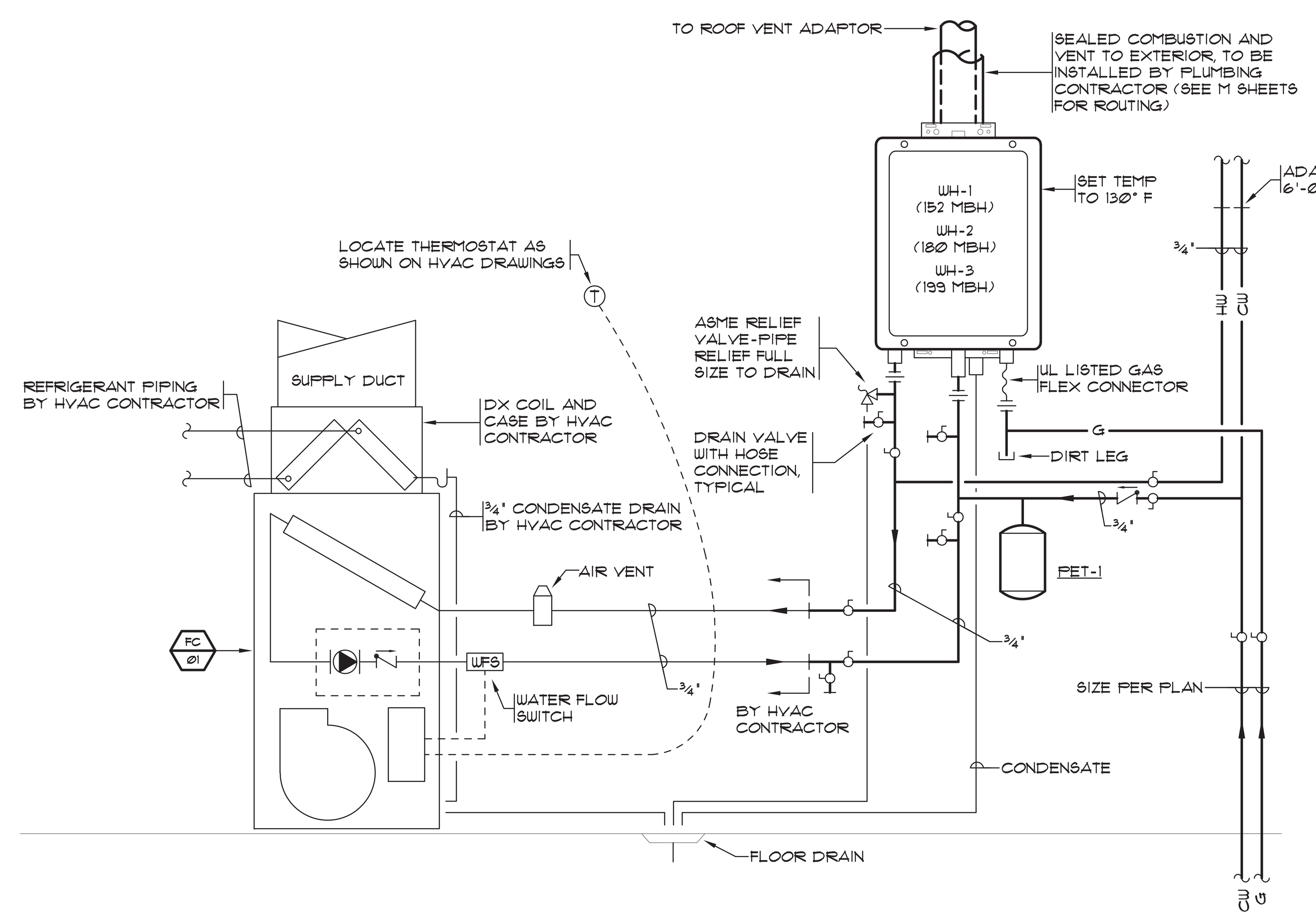

NOTE:
WATER HEATER, RELIEF VALVE, DRAIN VALVES, AIR VENT, WATER FLOW SWITCH, ALL CONTROLS AND VENTING TO BE PROVIDED AS A COMPLEX PACKAGE FROM THE VENDOR.

DOMESTIC HYDRONIC PIPING DIAGRAM (C / P0.2E)

SCALE: NONE

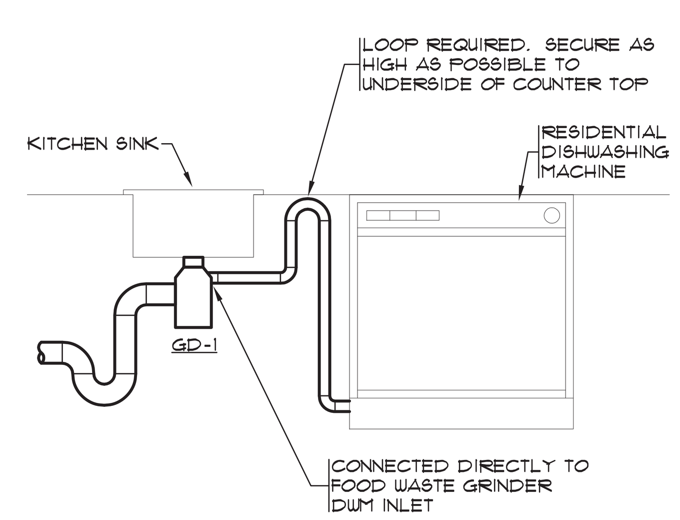

DISHWASHER DRAIN PIPE DIAGRAM (B / P0.2E)

SCALE: NONE

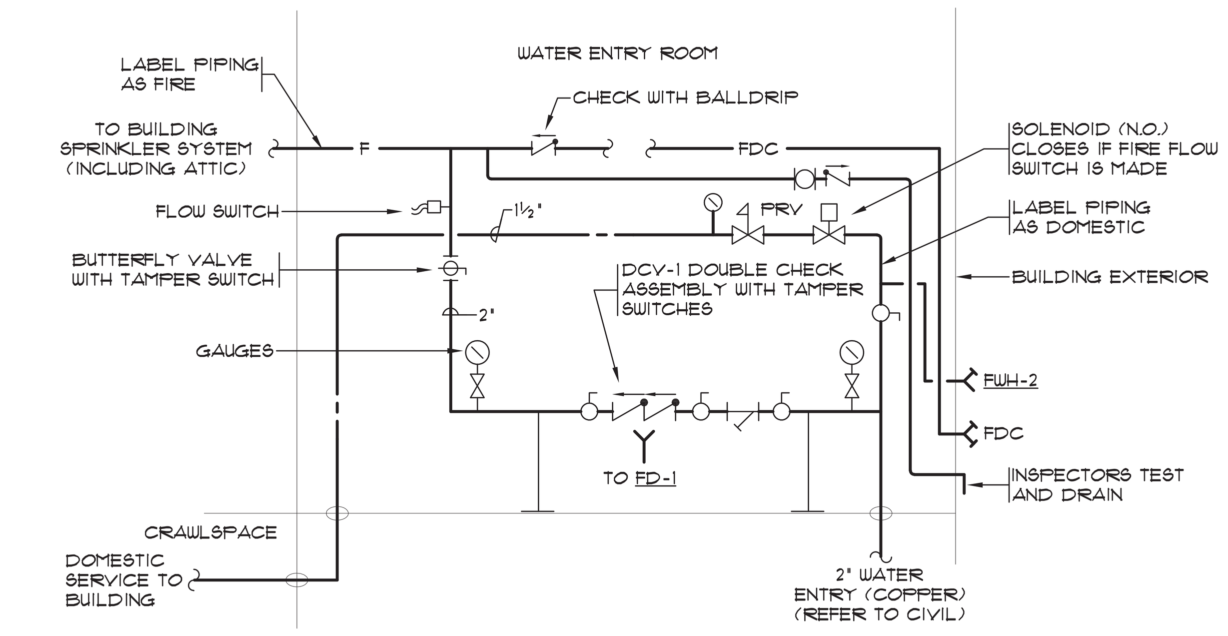

FIRE ENTRY SCHEMATIC (A / P0.2E)

SCALE: NONE

UPLANDS TOWNHOMES
DEVELOPED BY THE HOUSING AUTHORITY OF PUEBLO
PROJECT No: I.F.B. 17-524-RAD
ACERO AVE. and SPRAGUE AVE., PUEBLO, COLORADO 81004

IHGF ARCHITECTS

HOUSING AUTHORITY OF THE CITY OF PUEBLO

AE Associates, Inc.
Engineering Successful Building Environments
308 West Fillmore Street, Suite 200
Colorado Springs, Colorado 80907
(719) 282-9430
FAX (719) 282-9614

DATE 03/29/2017
DRAWN CAD
CHECK RDL
REVISIONS:

COLORADO REGISTERED PROFESSIONAL ENGINEER ROGER D. LEMMON 32686 03/29/2017

SHEET P0.2E

DRAWING LIMITS: 42, 30
DRAWING SIZE: 42x30
PLOT SCALE: 1:1
DRAWING NO:20161260.00 P02E

WORK NOTES (THIS SHEET ONLY)

1. REFER TO CIVIL PLANS TO COORDINATE THE ACTUAL SANITARY DIRECTION FOR OUTFLOW FOR THIS SPECIFIC BUILDING TYPE. SANITARY FLOW DIRECTION MAY NOT BE SAME FOR EACH OF THIS BUILDING TYPE.
2. REFER TO CIVIL FOR CONTINUATION.
3. FIRE/DOMESTIC WATER ENTERS WATER ENTRY ROOM FROM BELOW GRADE.
4. DOMESTIC WATER SERVICE DOWN AND INTO CRAWL SPACE. DOMESTIC WATER PIPING IN CRAWL SPACE TO BE TYPE "L" COPPER.
5. WATER AND FIRE RISERS LOCATED IN WATER ENTRY ROOM. SEE RISER DIAGRAMS ON SHEET P02E.
6. INDIVIDUAL GAS METERS FOR EACH UNIT. SERVICE TO METERS BY UTILITY CONTRACTOR.
7. GAS AND WATER PIPING IN CRAWL SPACE. COORDINATE WITH HVAC DUCTWORK.
8. GAS AND WATER TO STUB UP INTO UNIT MECHANICAL ROOM. PROVIDE ½" TEE AFTER ISOLATION VALVE AND PIPE BACK TO CRAWL SPACE FOR WALL HYDRANT.
9. ½" UP TO FWH-1.

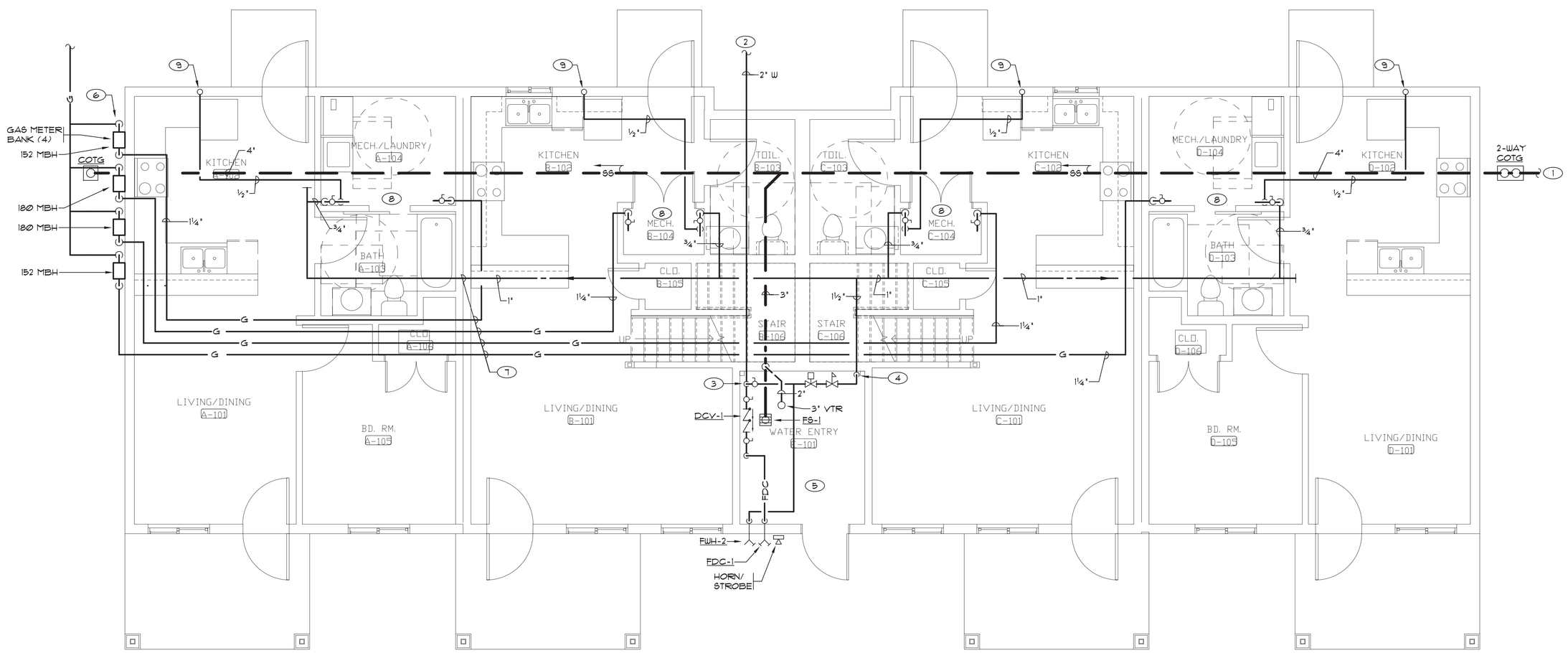

CRAWL SPACE FLOOR - BLDG E - PLUMBING

SCALE: 1/4" = 1'-0"

NORTH

DRAWING LIMITS: 42,30
PLOT SCALE: 1=1
PAPER SIZE: 42x30
DRAWING NO:2016126.00.00 P1.1E

COLORADO REGISTERED PROFESSIONAL ENGINEER
ROGER D. LEMON
32686
03/29/2017

HGE ARCHITECTS

HOUSING AUTHORITY OF THE CITY OF PUEBLO

AE Associates, Inc.
Engineering Successful Building Partnerships
309 West Pitkins Street, Suite 200
Colorado Springs, Colorado 80907
(719) 635-3450
FAX (719) 635-4414

UPLANDS TOWNHOMES
DEVELOPED BY THE HOUSING AUTHORITY OF PUEBLO

PROJECT No: LFB, 17-524-RAD

ACERO AVE. and SPRAGUE AVE., PUEBLO, COLORADO 81004

DATE	03/29/2017
DRAWN	CAD
CHECK	RDL
REVISIONS:	
SHEET	P1.1E

WORK NOTES (THIS SHEET ONLY)

1. 4" SANITARY. REFER TO CRAWL SPACE PLUMBING SHEETS AND CIVIL FOR ACTUAL BUILDING MAIN DIRECTION OF FLOW.
2. 2" WASHER STAND PIPE. SEE RISER B.
3. 4" WASTE FROM BATHROOM/WASHER ABOVE.
4. 2" VENT UP FROM BELOW.
5. 2" SINK VENT TO OFFSET UNDER WINDOW.
6. 2" VENT UP.
7. ¾" CW/HW UNIT SUPPLIES. ROUTE IN COPPER, THEN TRANSITION TO PEX IN CEILING AND TO FIXTURES. PROVIDE WITH EASY ACCESS ISOLATION VALVES.
8. ½" CW/HW UP TO WASHER BOX.
9. ½" CW UP TO WATER CLOSET.
10. ½" CW/HW UP TO TUB/SHOWER AND LAV.
11. ½" CW/HW DOWN INTERIOR WALL TO SUPPLY KITCHEN SINK.
12. ½" CW/HW DOWN WARM SIDE OF INSULATION TO SUPPLY KITCHEN SINK.
13. ½" CW/HW UP TO TUB/SHOWER.
14. 2" WASTE DOWN.
15. 4" WASTE DOWN.
16. 2" WASTE FROM LAV ABOVE.
17. ½" CW/HW UP TO LAV ABOVE.
18. ROUTE 1" WASHER DRAIN PAN LINE THROUGH JOISTS, DOWN WALLS AND DAYLIGHT NEAR GRADE.
19. ROUTE PIPING IN CRAWL SPACE.
20. COORDINATE LOCATION OF WATER HEATER WITH ASSOCIATED FAN COIL UNIT AND DUCTWORK. SEE HVAC SHEETS FOR MECHANICAL ROOM LAYOUT. REFER TO PIPING DIAGRAM ON SHEET P02E.
21. WATER HEATER VENT TO BE PIPED VERTICALLY THROUGH 2nd FLOOR TO ROOF AND TERMINATED PER MANUFACTURER'S REQUIREMENTS. REFER TO VENTING DIAGRAM ON SHEET P02E.
22. WATER HEATER TO VENT TO BE PIPED VERTICALLY THROUGH ROOF AND TERMINATED PER MANUFACTURER'S REQUIREMENTS. REFER TO VENTING DIAGRAMS ON SHEET P02E.

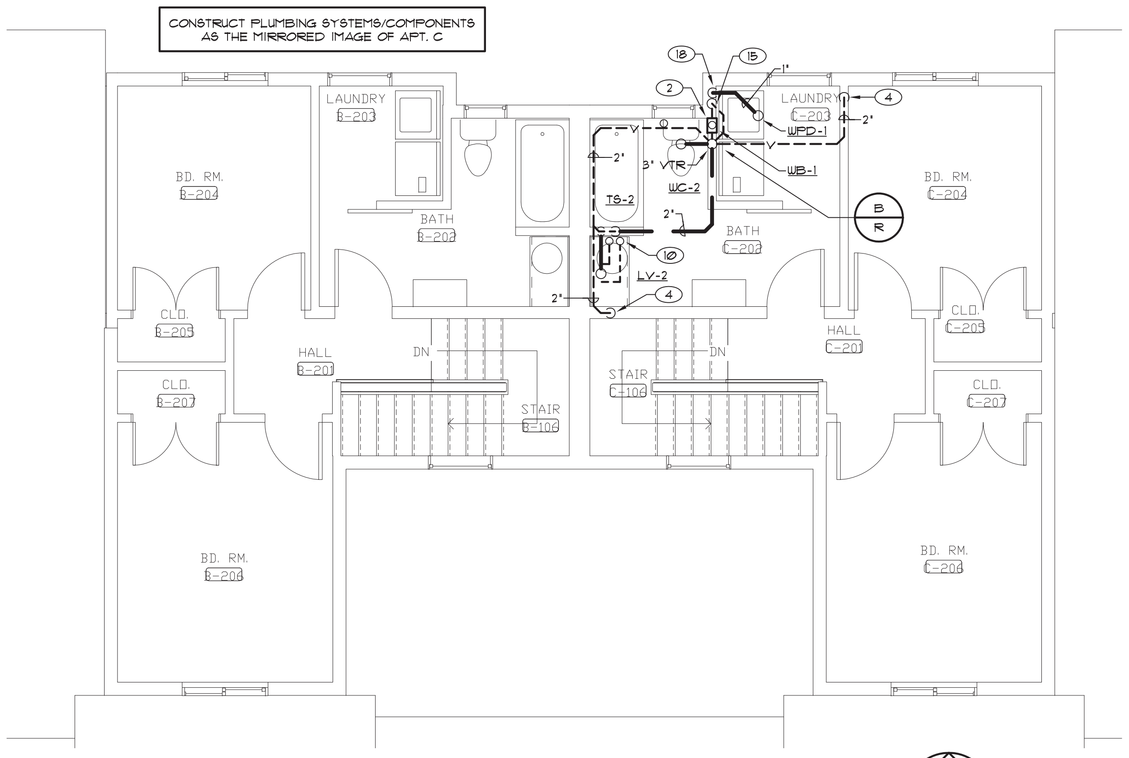

2nd FLOOR - BLDG E - PLUMBING

SCALE: 1/4" = 1'-0"

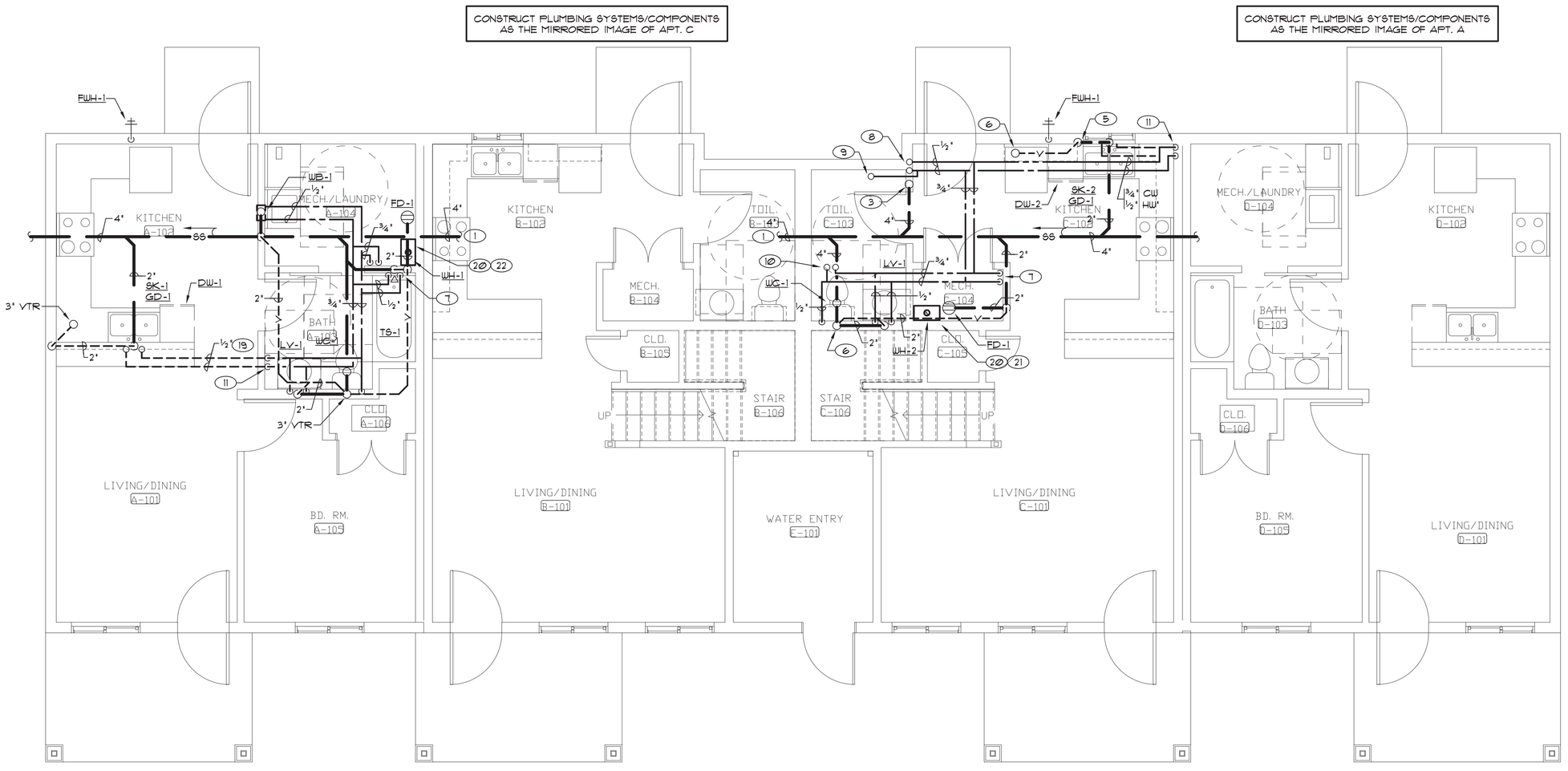

1st FLOOR - BLDG E - PLUMBING

SCALE: 1/4" = 1'-0"

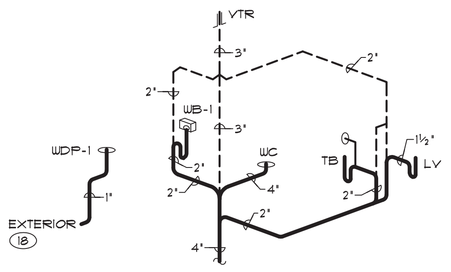

WASTE/VENT RISER B R

SCALE: NONE

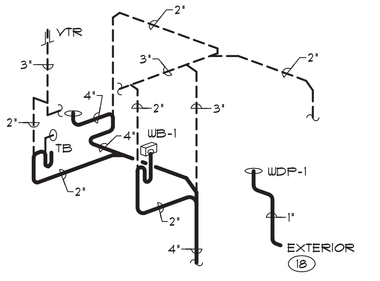

WASTE/VENT RISER D R

SCALE: NONE

HOUSING AUTHORITY OF THE CITY OF PUEBLO

HGE ARCHITECTS

AE Associates, Inc.
Engineering Successful Building Partnerships
308 West Pitkin Street, Suite 200
Gunnison, Colorado 81230
(719) 530-0530
FAX (719) 530-0616

UPLANDS TOWNHOMES
DEVELOPED BY THE HOUSING AUTHORITY OF PUEBLO

PROJECT No: LF8, 17-524-RAD

ACERO AVE. and SPRAGUE AVE., PUEBLO, COLORADO 81004

DATE	03/29/2017
DRAWN	CAD
CHECK	RDL
REVISIONS:	
SHEET	P1.2E

COLORADO REGISTERED PROFESSIONAL ENGINEER
ROGER D. LEMON
32686
03/29/2017

DRAWING LIMITS: 42,30
DRAWING SIZE: 42x30
PLOT SCALE: 1:1
DRAWING NO:2016126020 P12E

Meterstacks MS5 Style

GOUNDING ELECTRODE SYSTEM

PROVIDE A 1/0cu GROUNDING ELECTRODE. UFER GROUND AND FINAL CONNECTION TO COLD WATER ENTRY.

FEEDER SCHEDULE:

SERVICE LATERAL METERS TO XFMR
2 SETS PARALLEL (3#250,al, 2 1/2"c.)

TYPICAL UNIT PANEL
3#1/0,al+#6g. 1 1/2"c.

TYPICAL HOUSE PANEL
3#6cu+#8g. 1"c.

GENERAL NOTE:

LABEL BREAKERS AS 'SERVICE DISCONNECTS' 1, 2, 3, 4, 5

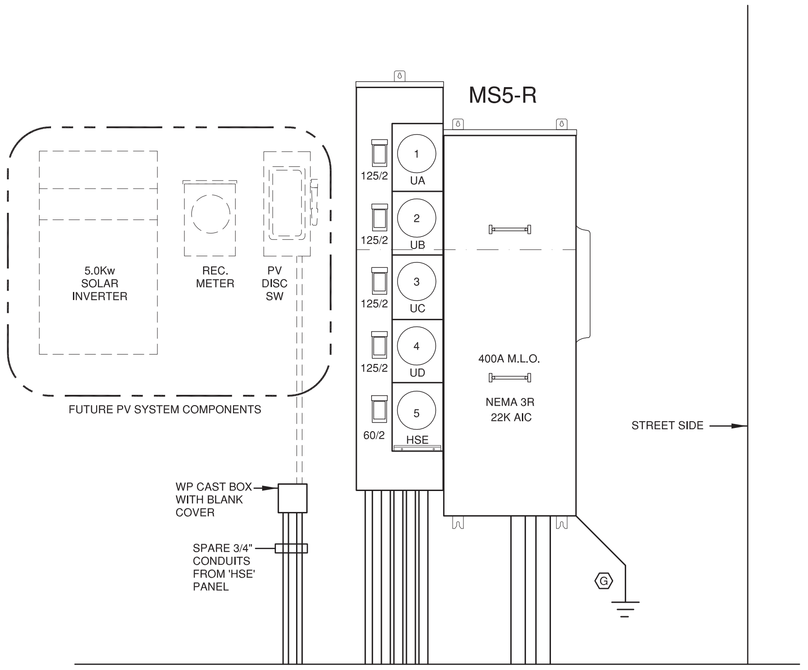

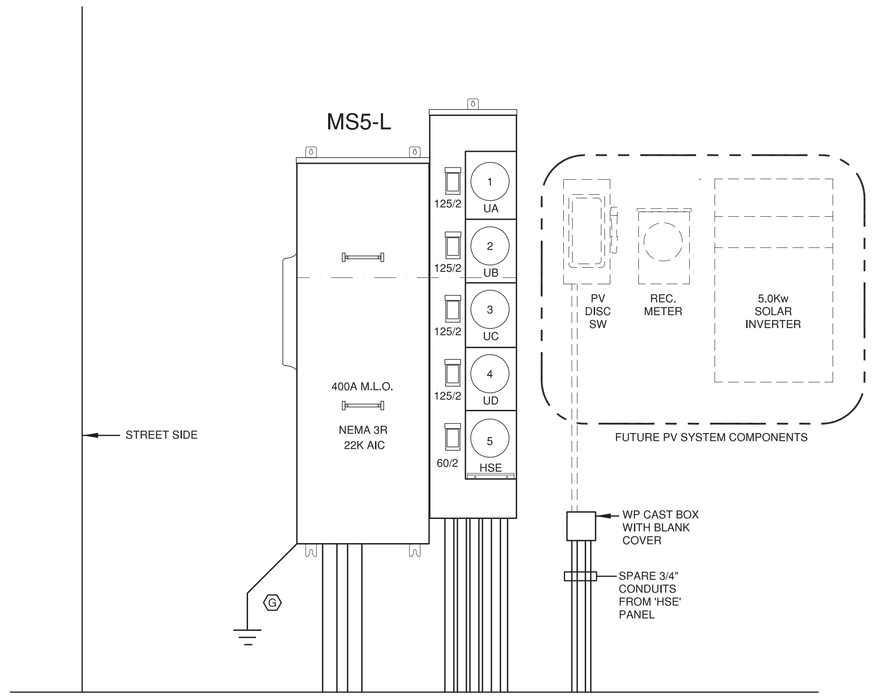

SCHEDULE FOR PANEL HSE

VOLTS/PHASE/WIRE 120/240/1ph-3w MAIN DEVICE 60a MLO
MOUNTING SURFACE S.C. RATING 10,000 AIC

NOTES: * Indicates Circuit may be used for Site Lighting
Re: ES1.3 for Building's Used. Max 350Va

Duty/Demand Load is Calculated Per NEC : Ltg, Cmp, Htg, Mtr & AC at 125%, Rec @ 10 + 50% and Othr @100%

PHASE A (KVA) 2.9 CONNECTED KVA 3.28
PHASE B (KVA) 0.9 LOAD FACTOR 1.16
PHASE C (KVA) N/A DUTY/DEMAND KVA 3.79

AVERAGE AMPS/LEG BASED ON DUTY/DEMAND KVA 15.8

#	DESCRIPTION	LOAD	BRKR	PH	BRKR	LOAD	DESCRIPTION	#
1	Rec : Wtr Entry + Exter	540	20/1	A	20/1	350	Othr : Fire Prot Sys Pnl	2
3	Ltg : Exterior Bldg	540	20/1	B	20/1	350	Othr : Irrigation Control	4
5	Mech : Wtr Entry	1,500	20/1	A	20/1		* Spare	6
7	Spare		20/1	B	20/1		Spare	8
9	Space			A			Space	10
11	Space			B			Space	12

ENCLOSURE TYPE: NEMA 1 BREAKER TYPE: PLUG ON
CLASS OF EQUIPMENT: LOADCENTER NO. CIRCUITS: 12

Building E : Load Summary : 400a Service				
Load Type	Load Code	Conn Kva	Demand Factor	Dmd Kva
Lighting	Ltg	0.5	125%	0.6
Gen Use Rec	Rec	0.5	10+50%	0.5
Mechanical Equip	Mech	1.5	125%	1.9
Geneneral Lighting	GL	46.8	3+35%	18.3
Dryer	D	20.0	100%	20.0
Range	RG	32.0	50%	16.0
Othr	Othr	22.5	100%	22.5
Demand Kva		Demand Kva		79.8
Demand Amps		Demand Amps		332.6

Notes:

1. HOUSE LOADS 'Ltg', 'Rec', 'Mech'
2. UNIT LOADS 'GL', 'D', 'RG', Othr'

FIXTURE SCHEDULE

TYPE	DESCRIPTION & MANUFACTURES CATALOGUE NUMBERS ALL BALLASTS ARE 120V	NOTES	FINISH	LOCATION	LAMP(S) NO.	LAMP(S) TYPE
A	NOMINAL 18"w x 4' LONG FLUORESCENT FIXTURE W. MEDIUM OAK FINISH, FROSTED WHITE ACRYLIC LENS AND 120V ELECTRONIC BALLAST. SEA GULL LIGHTING #59361LE-15 OR APPROVED EQUIVALENT.	1	WHITE	KITCHEN	4	82 CRI F32T8/830 3000 Deg K
B	6" ROUND IC RATED LED CAN LIGHT WITH 30K LAMP COLOR AND WHITE TRIM RING. PRESCOLITE #LBRLED2A10L-30K-WH-DBXQL OR APPROVED EQUIVALENT.	1	WHITE	VARIOUS	–	12W/ 1000LUM/ 3000 Deg K
C	NOMINAL 8" DIAMETER SURFACE MOUNTED (ROUND) LED LIGHT WITH STANDARD HIGH IMPACT POLYCARBONATE DIFFUSER. COLUMBIA #LBSLED410L-30K-9-WH OR APPROVED EQUIVALENT.	1	WHITE	VARIOUS	–	18W/ 940LUM/ 3000 Deg K
D	SURFACE MOUNTED NOMIMAL 15"DIA. x 5.5" HIGH FLUORESCENT FIXTURE WITH BRUSHED NICKEL TRIM AND ETCHED ALABASTER STYLE GLASS. SEA GULL LIGHTING #75943BLE-962 OR APPROVED EQUIVALENT.	1	NICKEL	VARIOUS	3	80 CRI 13W-GU24 3000 Deg K
E	2 – LAMP WALL MOUNTED OPEN FLUORESCENT STRIP WITH 120V NPF ELECTRONIC BALLAST PROGRESS LIGHTING #P7266-30EB OR APPROVED EQUIVALENT.	1	B.W.E.	LAUNDRY	2	82 CRI F32T8 3000 Deg K
F	SURFACE MOUNTED NOMIMAL 13"DIA. x 5" HIGH FLUORESCENT FIXTURE WITH BRUSHED NICKEL TRIM AND ETCHED ALABASTER STYLE GLASS. SEA GULL LIGHTING #75942BLE-962 OR APPROVED EQUIVALENT.	1	NICKEL	DINING	2	80 CRI 13W-GU24 3000 Deg K
G	SURFACE MOUNTED 52" DIA CEILING FAN W/(5) BLADES, TWO LIGHT FAN LIGHT KIT WITH SWIRL ALABASTER STYLE GLASS. HUNTER #28722 WITH LIGHT KIT OR APPROVED EQUIVALENT.	1	WHITE	LIVING	2	80 CRI 13W-GU24 3000 Deg K
H	24" WIDE OVER MIRROR LIGHT WITH BRUSHED NICKEL FINISH AND WHITE TEXTURED POLYCARB. DIFFUSER. KICHLER #8300K-11142NILED OR APPROVED EQUIV.	1	NICKEL	RESTROOMS	–	20W/ 1410LUM 3000 Deg K
J	1 LIGHT DECORATIVE SCONCE WITH FLUOR. BULB, NICKEL FINISH AND WHITE GLASS. SEA GULL LIGHTING #49036BLE-999 OR APPROVED EQUIVALENT.	1	NICKEL	HALL	1	80 CRI 13W-GU24 3000 Deg K
K	SMALL LED EXTERIOR WALL SCONCE OPERATED VIA ASTRONOMICAL TIME SWITCH. MOUNT AT 6'-6" TO CENTER. KICHLER # 8300K-49278XXLED OR APPROVED EQUIV.	1	BY ARCH	EXTERIOR	–	8W/ 720LUM/ 3000 Deg K
L	DARK SKY COMPLIANT LED ADDRESS LIGHT OPERATED VIA ASTRONOMICAL TIME SWITCH. MOUNT LV TRANSFORMER IN ACCESSIBLE SPACE. KICHLER #8300K-43800XXLED OR APPROVED EQUIV.	1	BY ARCH	EXTERIOR	–	4W/ 250LUM/ 3000 Deg K
AA	EXTERIOR LED WALL SCONCE WITH TYPE III DISTRIBUTION AND INTEGRAL PHOTOCELL. HUBBEL #TRP1-12L-15-3K7-3-U-XX-PCU OR APPROVED EQUIVALENT.	1	BY ARCH	EXTERIOR	–	15W/ 1477LUM/ 3000 Deg K
BB	EXTERIOR SMALL LED WALL SCONCE OPERATED VIA ASTRONOMICAL TIME SWITCH. BEGA #22 261-XX-3000K OR APPROVED EQUIVALENT.	1	BY ARCH	EXTERIOR	–	6W/ 362LUM/ 3000 Deg K

NOTES:

1. SUBSTITUTIONS PRIOR TO BID REQUIRED - ENGINEER MUST RECEIVE PRODUCT DATA 10 DAYS PRIOR TO BID - ONLY PRODUCT LISTED IN AN ADDENDUM WILL BE ACCEPTED.

FIXTURES TO BE ENERGY STAR RATED OR UTILIZE ENERGY EFFICIENT LAMPS AS LISTED IN STANDARDS.

SYMBOL LEGEND

	20A-1P LIGHT SWITCH MOUNTED AT +45"A.F.F.
3way	20A, 3 WAY SWITCH MOUNTED AT +45".A.F.F.
	WALL MOUNTED DUAL TECHNOLOGY OCCUPANCY SENSOR MOUNTED AT +45" A.F.F. WATTSTOPPER #DSW-301 OR APPROVED EQUIVALENT.
	WALL MOUNTED FAN SWITCH MOUNTED AT +45" A.F.F.
	WALL MOUNTED ASTRONOMICAL TIME CLOCK ON/OFF FUNCTION MOUNTED AT +45" A.F.F. WATTSTOPPER #RT-200 OR APPROVED EQUIVALENT.
	20A, TAMPER RESISTANT DUPLEX RECEPTACLE WITH ONE-HALF SWITCHED FOR DISPOSER & DISHWASHER. MOUNT BELOW COUNTER.
GFCI	15A, TAMPER RESISTANT GROUND FAULT CIRCUIT INTERRUPT TYPE DUPLEX RECEPTACLE.MOUNT AT +45" A.F.F. UNLESS INDICATED OTHERWISE ON DRAWINGS.
	15A, TAMPER RESISTANT AFCI BREAKER PROTECTED (GENERAL USE) DUPLEX RECEPTACLE. MOUNTED AT +18".
	30A-120/250V OUTLET FOR DRYER. GROUND PER NEC.
	50A-120/250V OUTLET FOR RANGE. GROUND PER NEC. MOUNTING HEIGHT TO BE COORDINATED WITH EQUIPMENT INSTALLED.
to EA	CONNECTION FOR EXHAUST FAN. PROVIDE SNAP SWITCH NO THERMAL OVERLOAD MOUNT @ MTR.
EA	CONNECTION FOR FAN COIL UNIT. PROVIDE SNAP SWITCH WITH THERMAL OVERLOAD MOUNT @ MTR.
	CONNECTION FOR WATERHEATER. RE: MECHANICAL
	CONNECTION FOR MECHANICAL EQUIPMENT WITH HEATING COIL.
	HEAVY DUTY MOTOR DISCONNECT SWITCH FOR UNIT AIR CONDITIONING UNIT.
	TELEPHONE OUTLET MOUNTED. PROVIDE A SINGLE GANG BACKBOX, BLANK PLATE AND 3/4"c. INTO ACCESSIBLE CRAWLSPACE OR AS OTHERWISE DIRECTED BY ARCHITECT.
	CABLE TELEVISION OUTLET – PROVIDE SINGLE GANG BACKBOX, BLANK PLATE AND 3/4"c. INTO ACCESSIBLE CRAWLSPACE OR AS OTHERWISE DIRECTED BY ARCHITECT.
CD alarm	120V HARD WIRED COMBINATION RESIDENTIAL SMOKE DETECTOR/CARBON MONOXIDE DETECTOR WITH 9V BATTERY BACKUP AND ALARM. UNITS TO BE TANDEM WIRED WITHIN APT. UNIT TO SOUND ALARM'S SIMULTANEOUSLY.
	120V HARD WIRED STROBE LIGHT WITH 9V BATTERY BACK UP. UNITS TO BE INTERCONNECTED WITH THE SMOKE/CARBON DETECTORS IN UNIT.
WP	SYSTEM EXTERIOR WEATHER PROOF HORN/STROBE PROVIDED AND INSTALLED BY FIRE SPRINKLER CONTRACTOR AND TIED INTO FIRE SPRINKLER SYSTEM. CONDUIT AND BOXES BY ELEC CONTRACTOR.
CD	SYSTEM SMOKE DETECTOR PROVIDED AND INSTALLED BY FIRE SPRINKLER CONTRACTOR AND TIED INTO FIRE SPRINKLER SYSTEM. CONDUIT AND BOXES BY ELEC CONTRACTOR.
WF	WATERFLOW SWITCH/ES PROVIDED AND INSTALLED BY FIRE PROTECTION CONTRACTOR.
TS	TAMPER SWITCH/ES PROVIDED AND INSTALLED BY FIRE PROTECTION CONTRACTOR.
A	SYMBOL ATTRIBUTES – 'A' = MOUNTED ABOVE COUNTER. RE: ARCHITECTURAL CASEWORK.

COLORADO REGISTERED MICHAEL S. KOHNERT 33305 PROFESSIONAL ENGINEER

Z:\2017\2017.001\ 2017.001 Elec 03 03-29-17.dwg Apr 05, 2017 - 9:50am

HOUSING AUTHORITY CITY OF PUEBLO

KOHNERT ELECTRICAL ENGINEERS, INC.
911 South 8Th Street, Colorado Springs Co 80905
Phone (719) 520-0400 Fax (719) 520-0402
email@kohnertee.com

HIGIE ARCHITECTS

UPLANDS TOWNHOMES
DEVELOPED BY THE HOUSING AUTHORITY OF PUEBLO
PROJECT No: IFB. 17-524-RAD
ACERO AVE. and SPRAGUE AVE., PUEBLO, COLORADO 81004

BLDG E - ELECTRICAL LEGENDS AND SERVICE DIAGRAMS

DATE 03-29-17
DRAWN LMAK
CHECK MSK
REVISIONS:

SHEET E1.0E

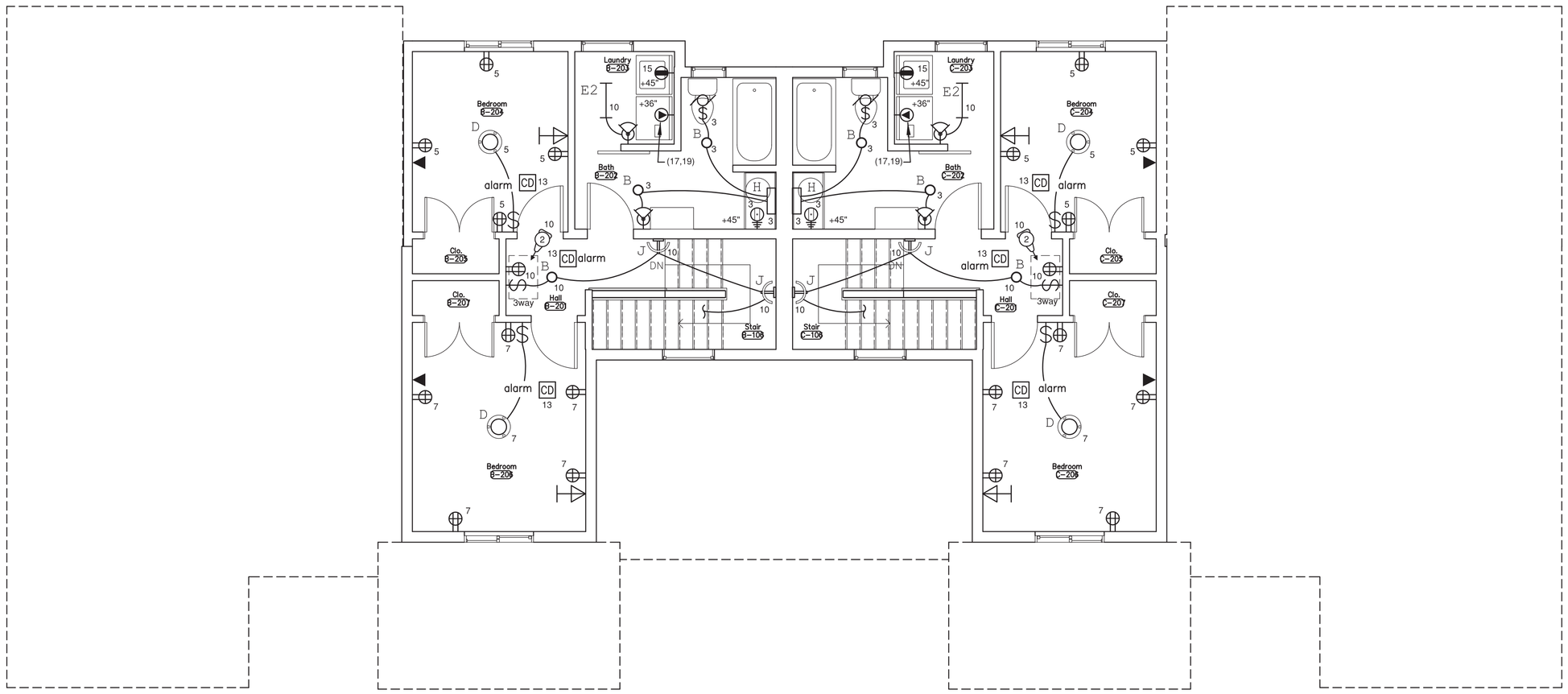

BLDG E - SECOND FLOOR - ELECTRICAL PLANS

N SCALE: 1/4" = 1'- 0"
0 2' 4' 8'

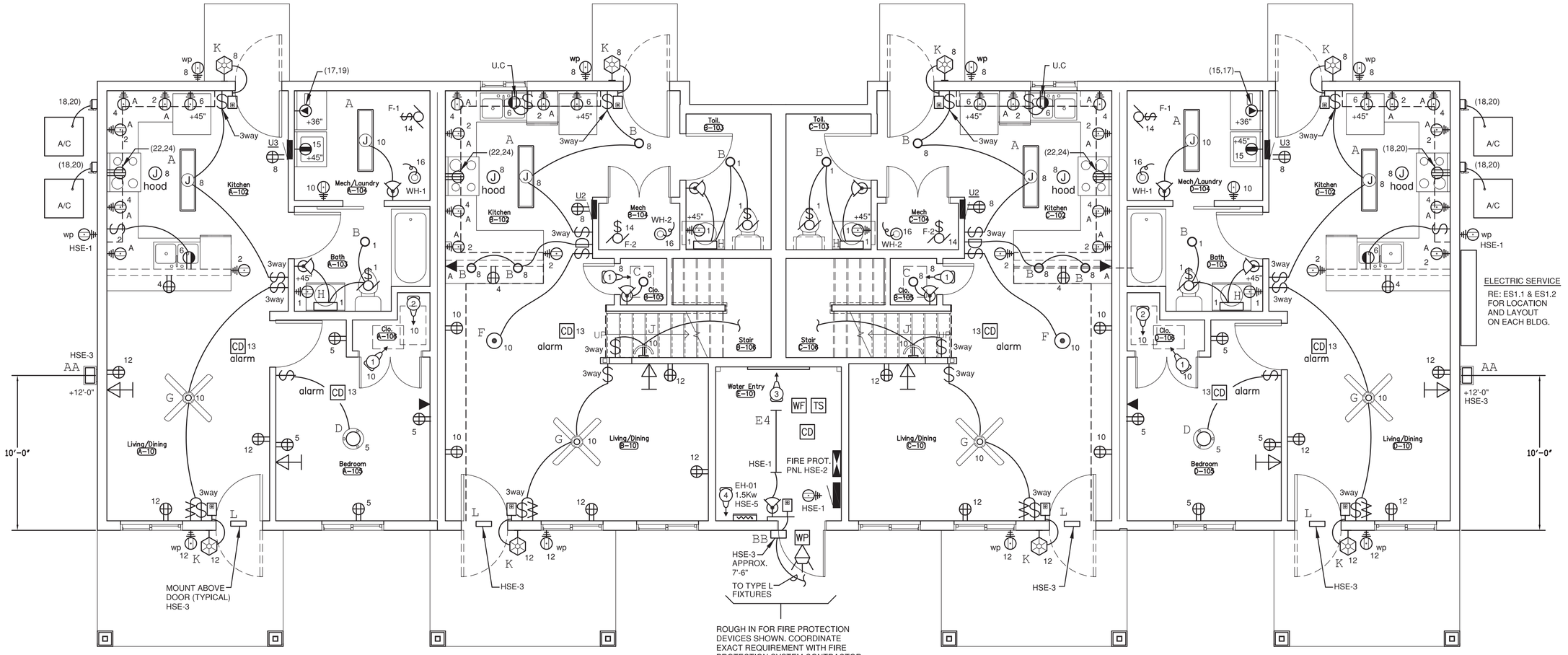

ROUGH IN FOR FIRE PROTECTION DEVICES SHOWN. COORDINATE EXACT REQUIREMENT WITH FIRE PROTECTION SYSTEM CONTRACTOR.

FINAL LAYOUT OF ROOM TO BE COORDINATED WITH EQUIPMENT.
DO NOT RUN WATER LINES OVER POWER PANEL.

BLDG E - FIRST FLOOR - ELECTRICAL PLANS

N SCALE: 1/4" = 1'- 0"
0 2' 4' 8'

SCHEDULE FOR PANEL U2

VOLTS/PHASE/WIRE 120/240/1ph-3w — MAIN DEVICE 125a MLO
MOUNTING FLUSH — S.C. RATING 10,000 AIC
NOTES: Provide with (2) each Spare 3/4"c. into Attic & Crawlspaces
A' Indicates Arc Fault Circuit Interrupt type Breaker.

Duty/Demand Load is Calculated Per NEC : Ltg, Cmp, Htg, Mtr & AC at 125%, Rec @ 10 + 50% and Othr @100%

PHASE A (KVA) 17.1 — CONNECTED KVA 32.28
PHASE B (KVA) 16.7 — LOAD FACTOR 0.78
PHASE C (KVA) N/A — DUTY/DEMAND KVA 25.22

AVERAGE AMPS/LEG BASED ON DUTY/DEMAND KVA 105.1

#	DESCRIPTION	LOAD	BRKR	PH	BRKR	LOAD	DESCRIPTION	#
1	GL : 1st Flr Toilet	1,500	A20/1	A	A20/1	1,500	GL : Kit Appliance	2
3	GL : 2nd Flr Bath	1,500	A20/1	B	A20/1	1,500	GL : Kit Appliance	4
5	GL : Bedrm 1	765	A20/1	A	A20/1	1,500	GL : Disposer/DW	6
7	GL : Bedrm 2	940	A20/1	B	A20/1	1,185	GL : Kit + Hall Lts	8
9	Spare		A20/1	A	A20/1	1,050	GL : Living Rm Rec	10
11	Spare		A20/1	B	A20/1	920	GL : Living Rm Rec	12
13	Othr : Smoke Detectors	600	A20/1	A	A20/1	495	Othr : Furnace	14
15	GL : Laundry Washer	1,500	A20/1	B	A20/1	960	Othr : Water Heater	16
17	Othr : Dryer	2,500	30/2	A	20/2	1,680	Othr : Condensing Unit	18
19	Do	2,500	Do	B	Do	1,680	Do	20
21	Space			A	50/2	4,000	Othr : Range	22
23	Space			B	Do	4,000	Do	24

ENCLOSURE TYPE: NEMA 1 — BREAKER TYPE: PLUG ON
CLASS OF EQUIPMENT: LOADCENTER — NO. CIRCUITS: 24

SCHEDULE FOR PANEL U3

VOLTS/PHASE/WIRE 120/240/1ph-3w — MAIN DEVICE 100a MLO
MOUNTING FLUSH — S.C. RATING 10,000 AIC
NOTES: Provide with (1) each Spare 3/4"c. into Attic & Crawlspaces
A' Indicates Arc Fault Circuit Interrupt type Breaker.

Duty/Demand Load is Calculated Per NEC : Ltg, Cmp, Htg, Mtr & AC at 125%, Rec @ 10 + 50% and Othr @100%

PHASE A (KVA) 16.6 — CONNECTED KVA 30.94
PHASE B (KVA) 15.9 — LOAD FACTOR 0.77
PHASE C (KVA) N/A — DUTY/DEMAND KVA 23.78

AVERAGE AMPS/LEG BASED ON DUTY/DEMAND KVA 99.1

#	DESCRIPTION	LOAD	BRKR	PH	BRKR	LOAD	DESCRIPTION	#
1	GL : 1st Flr Toilet	1,500	A20/1	A	A20/1	1,500	GL : Kit Appliance	2
3	Spare		A20/1	B	A20/1	1,500	GL : Kit Appliance	4
5	GL : Bedrm 1	765	A20/1	A	A20/1	1,500	GL : Disposer/DW	6
7	Spare	1,500	A20/1	B	A20/1	895	GL : Kit + Lndry Lts	8
9	Spare	495	A20/1	A	A20/1	890	GL : Living Rm Rec	10
11	Spare	960	A20/1	B	A20/1	920	GL : Living Rm Rec	12
13	Othr : Smoke Detectors	300	A20/1	A	A20/1	495	Othr : Furnace	14
15	Othr : Laundry	1,500	A20/1	B	A20/1	960	Othr : Water Heater	16
17	D : Dryer	2,500	30/2	A	20/2	1,130	Othr : Condensing Unit	18
19	Do	2,500	Do	B	Do	1,130	Do	20
21	Space			A	50/2	4,000	RG : Range	22
23	Space			B	Do	4,000	Do	24

ENCLOSURE TYPE: NEMA 1 — BREAKER TYPE: PLUG ON
CLASS OF EQUIPMENT: LOADCENTER — NO. CIRCUITS: 24

GENERAL NOTES

IT IS THE CONTRACTOR's RESPONSIBLITY NOT TO EXCEED OUTLET SPACING AS REQUIRED BY THE NATIONAL ELECTRICAL CODE.

CONFIRM EXACT LOCATION OF MECHANICAL EQUIPMENT PRIOR TO ROUGH-IN.

CATV AND TELEPHONE REQUIREMENTS

PROVIDE ROUGH-IN FOR TV AND PHONE OUTLETS. - PRVIDE BACKBOX AND A 3/4"c. STUBBED INTO CRAWLSPACE OR OTHERWISE AS DIRECTED BY ARCHITECT. PROVIDE INSULATED BUSHING ON STUB END OF CONDUIT. CABLES (NIC).

POWER BRANCH CIRCUIT REQUIREMENTS

15a GENERAL LIGHTING BRANCH CIRCUITS (x#14+g).
20a GENERAL LIGHTING BRANCH CIRCUITS (x#12+g).
30a A/C UNIT & DRYER BRANCH CIRCUIT (2#10+g).
50a ELECTRIC RANGE BRANCH CIRCUIT (3#6+g).

WIRING METHODS IN UNITS MAY BE MC OR FLEXIBLE NON METALLIC CONDUIT SYSTEMS AS ALLOWED BY THE NATIONAL ELECTRICAL CODE. NMC ALLOWED FOR APARTMENT UNIT WIRING ONLY.

ALL 'AFCI' CIRCUITS REQUIRE A DEDICATED NEUTRAL

GENERAL NOTES:

1. ONLY APPROVED PRODUCTS LISTED ON DRAWINGS OR IN AN ADDENDUM WILL BE ACCEPTED.
2. REFER TO MECHANICAL DRAWINGS AND ADDENDUMS FOR EXACT LOCATION OF ALL MECHANICAL EQUIPMENT.
3. ELECTRICAL CONTRACTOR TO CONFIRM ALL MECHANCIAL EQUIPMENT CONNECTIONS PRIOR TO ROUGH-IN.
4. ELECTRICAL CONTRACTOR SHALL REFER TO ARCHITECTURAL CASEWORK DRAWINGS PRIOR TO ROUGH-IN.
5. ALL CONDUITS FOR LOW VOLTAGE SYSTEMS TO HAVE INSULATED BUSHINGS AND PULL STRING. COORDINATE WITH SERVING UTILITY (TELEPHONE/TV) FOR EXACT REQUIREMENTS.
6. ALL KITCHEN RECEPTACLES TO BE TAMPER RESISTANT GFI RECEPTACLES.
7. RE: ARCHITECTURAL DRAWINGS FOR FIRE SEPERATION.

FLAG NOTES:

1. PROVIDE (2) FLUORESCENT KEYLESS (EQUAL TO LEVITON 9860-LHG) AND (1) RECEPTACLE IN CRAWLSPACE. WIRE TO CIRCUIT INDICATED.
2. PROVIDE (2) FLUORESCENT KEYLESS (EQUAL TO LEVITON 9860-LHG) AND (1) RECEPTACLE IN ATTIC SPACE. WIRE TO CIRCUIT INDICATED.
3. PROVIDE A 4'Wx4'H PLYWOOD BACKBOARD FOR INCOMING PHONE/CATV. COORDINATE EXACT REQUIREMENTS WITH SERVICE PROVIDERS.
4. PROVIDE 120V CONNECTION FOR IRRIGATION CONTROLS. COORDINATE EXACT REQUIREMENTS WITH EQUIPMENT SUPPLIER. WIRE TO CIRCUIT HSE-4.

COLORADO REGISTERED PROFESSIONAL ENGINEER 33305

Z:\2017\2017.001\ 2017.001 Elec CD 03-29-17.dwg Apr 05, 2017 - 9:51am

HIGIE ARCHITECTS

HOUSING AUTHORITY CITY OF PUEBLO

KOHNERT ELECTRICAL ENGINEERS, INC.
911 South 8th Street, Colorado Springs Co 80905
Phone (719) 520-0400 Fax (719) 520-0405
email@kohnertelec.com

UPLANDS TOWNHOMES
DEVELOPED BY THE HOUSING AUTHORITY OF PUEBLO
PROJECT No: LFB. 17-524-RAD
ACERO AVE. and SPRAGUE AVE., PUEBLO, COLORADO 81004

DATE 03-29-17
DRAWN LMAK
CHECK MSK
REVISIONS:

BLDG E - ELECTRICAL PLANS

SHEET E1.1E